ANKARA YILDIRIM BEYAZIT UNIVERSITY

GRADUATE SCHOOL OF NATURAL AND APPLIED SCIENCES



THE EFFECT OF FLOW CHANNEL GEOMETRY ON PRESSURE DROP IN SOLID OXIDE FUEL CELLS

M.Sc. Thesis by

Gulshan Asadova

Department of Mechnical Engineering

January, 2022

ANKARA

THE EFFECT OF FLOW CHANNEL GEOMETRY ON PRESSURE DROP IN SOLID OXIDE FUEL CELLS

A Thesis Submitted to

The Graduate School of Natural and Applied Sciences of Ankara Yıldırım Beyazıt University

In Partial Fulfillment of the Requirements for the Degree of Master of Science in Department of Mechnical Engineering

by

Gulshan Asadova

January, 2022

ANKARA

M. Sc. THESIS EXAMINATION RESULT FORM

We have read the thesis entitled **"THE EFFECT OF FLOW CHANNEL GEOMETRY ON PRESSURE DROP IN SOLID OXIDE FUEL CELLS"** completed by **Gulshan ASADOVA** under supervision of **Prof. Dr. Veli ÇELIK** and we certify that in our opinion it is fully adequate, in scope and in quality, as a thesis for the degree of Master of Science.

Prof. Dr. Veli ÇELIK

Supervisor

Dr. Mükerrem ŞAHIN

Jury Member

Dr. Ismet TIKIZ

Jury Member

Prof. Dr. Sadettin ORHAN

Director

Graduate School of Natural and Applied Sciences

ETHICAL DECLARATION

I hereby declare that, in this thesis, which has been prepared in accordance with the Thesis Writing Manual of Graduate School of Natural and Applied Sciences,

- All data, information, and documents were obtained in the framework of academic and ethical rules,
- All information, documents, and assessments are presented in accordance with scientific ethics and morals,
- All of the materials that have been utilized are fully cited and referenced,
- No changes have been made in the utilized materials,
- All of the work presented is original,

and in any contrary case of the above statements, I agree to renounce all of my legal rights.

Date: 10/01/2022 **Signature: ……..**

Name & Surname: Gulshan ASADOVA

ACKNOWLEDGEMENTS

During the thesis period, I would like to thank Prof. Dr. Veli ÇELIK for his guidance and valuable support.

I would also like to thank my precious teacher Anıl Can TÜRKMEN, who guided me whenever I needed his valuable knowledge and experience in the realization and completion of this study.

During the thesis period, I have a special thanks to Dr. İsmet TIKIZ who support me to be an MSc engineer.

I am grateful to my valuable teacher, Prof. Dr. Beycan IBRAHIMOGLU, who helped me determine the thesis topic.

I would like to thank all my friends who were with me throughout the thesis, as well as my dear colleague and friend Yasemin UCARI. And also my great thanks go to the dear friends Nazrin Alizada and Sabina Imanova for their support.

At the and my special gratefulness to my family for their unconditional financial and moral support throughout my education life.

2022, 10 January **Gulshan ASADOVA**

THE EFFECT OF FLOW CHANNEL GEOMETRY ON PRESSURE DROP IN SOLID OXIDE FUEL CELLS

ABSTRACT

In the thesis work, the impacts of flow channel geometries on the pressure drop of the fuel cell in a multi-cell fuel cell were investigated. The pressure drop behavior in the flow channels has important effects on the fuel cell performance.

Within the scope of this thesis, a stack with 30 and 40 cells was designed in the Solidworks program. The designed stack was solved in Comsol Multiphysics 5.5 software and pressure drops were obtained. The obtained results were contrasted with the experimental data in the literature and verified. However, it is seen that the pressure drop increases with increasing distance between the channels in the parallel flow channel. As can be seen from the changing manifold dimensions, the pressure drop decreased as the manifold size increased, the pressure drop incremented as the manifold dimension narrowed and the best performance was observed.

Keywords: Flow channel geometry, solid oxide fuel cell, pressure drop.

KATI OKSİT YAKIT PİLİNDE AKIŞ - KANALI GEOMETRİSİNİN BASINÇ DÜŞÜMÜNE ETKİSİ

ÖZET

Yapılan tez çalışmasında çok hücreli yapıya sahip bir yakıt pilinde, akış kanalı geometrilerinin yakıt pilinin basınç düşümüne etkileri incelenmiştir. Akış kanallarında meydana gelen basınç düşüşü davranışının yakıt pili performansı üzerinde önemli etkileri vardır.

Bu tez kapsamında Solidworks programında 30 ve 40 hücreli bir stack tasarlanmıştır. Tasarlanan stack Comsol Multyphysics 5.5 yazılımında çözdürülmüş ve basınç düşümleri elde edilmiştir. Elde edilen sonuçlar literatürdeki deneysel verilerle karşılaştırılması yapılmış ve doğrulanmıştır. Bununla birlikte parallel akış kanalında artan kanal arası mesafe ile basınç düşümünün arttığı görülmektedir. Deyişen manifold ölçülerindende görüldüğü gibi manifold ölçüsü artdıkça basınç düşümü azalmış, manifold ölçüsü daraldıkça basınç düşümü artmış ve en iyi performans gözlemlenmiştir.

Anahtar Kelimeler: Akış kanalı geometrisi, katı oksit yakıt pili, basınç düşümü

CONTENTS

M. Sc. THESIS EXAMINATION RESULT FORM ii
ETHICAL DECLARATION iii
ACKNOWLEDGEMENTS iv
ABSTRACT v
ÖZET vi
CONTENTS vii
ABBREVATIONS ix
LIST OF SYMBOLS x
LIST OF TABLES xi
LIST OF FIGURES xii
CHAPTER 1 - INTRODUCTION 1
1.1 History of Fuel Cell 2
1.2 Fuel Cells of Working Principle 3
1.3 Fuel Cells of Disadvantages and Advantages 4
1.4 Fuels for Fuel Cells 5
1.5 Usage Areas of Fuel Cells 5
1.5.1 Space studies / Military Applications 5
1.5.2 Domestic Applications 6
1.5.3 Portable Power Supply Applications 6
1.5.4 Waste Water Applications 6
1.5.5 Vehicle Applications 6
1.6 General Characteristics of Fuel Cells 7
1.7 Type of Fuel Cell 8
1.7.1 Alkaline Fuel Cell (AFC) 8
1.7.2 Phosphoric Acid Fuel Cells (PAFC) 10
1.7.3 Molten Carbonate Fuel Cell 11
1.7.4 Proton Exchange Membrane fuel cell 13
1.7.5 Direct Methanol Fuel Cell 15
1.8 Literature Survey 17
CHAPTER 2 - SOLID OXIDE FUEL CELL 27
2.1 Solid Oxide Fuel Cell Types 28
2.2 Solid Oxide Fuel Cell Working Principle 30

2.3 Open Circuit Potential 31
2.4 Polarization 32
2.4.1 Ohmic polarization 32
2.4.2 Activation polarization 33
2.4.3 Concentration polarization 33
2.4.4 Actual Cell Voltage 34
2.4.5 Cell efficiency 34
2.5 Solid Oxide Fuel Cell Components 34
2.5.1 Anode 35
2.5.2 Cathode 36
2.5.3 Electrolyte 36
2.5.4 Interconnector 37
2.5.5 Sealant 38
2.5.6 Bipolar plates 39
2.6 Classification of Solid Oxide Fuel Cells 40
2.6.1 Classification of Temperature 41
2.6.2 Classification by Cell and Stack Designs 41
2.6.3 Classification By Support Types 42
2.6.4 Classification by Flow Configuration 42
2.6.5 Classification by Fuel Reform Types 42
2.7 The Effects of Channel Section Geometry on Stack Performance 42
CHAPTER 3 - METHODOLOGY AND METHOD 44
3.1 Conservation of Momentum equation 44
3.2 Conservation of Mass equation 44
3.3 Conservation of Energy Equation 44
3.4 Thermal Behaviors of the SOFC Model 45
3.5 Boundary conditions and Acceptances 45
CHAPTER 4 - RESULTS AND DISCUSSIONS 47
4.1 Model Description 47
4.2 Model Validation 51
CHAPTER 5 - CONCLUSION AND RECOMENDATION 56
REFERENCES 58
CURRICULUM VITAE 65

ABBREVATIONS

AFC	Alcaline Fuel Cell
BP	Bipolar Plate
CBS	Characteristic Based Split
DC	Direct Current
DIR	Direct Internal Reform
DMFC	Direct Methanol Fuel Cell
GDL	Gas Diffusion Layer
HT	High Temperature
IIR	Indirect Internal Reform
IT	Intermediate Temperature
LSF	Strontium Doped Lanthanum Ferrite
LSM	Strontium Doped Lanthanum Manganite
LT	Low Temperature
MCFC	Molten Carbonate Fuel Cell
MEA	Membrane Electrode Assembly
NASA	National Aeronautics and Space Administration
PAFC	Phosphoric Acid Fuel Cell
PEFC	Polymer Electrolyte Fuel Cell
PTFE	Polytetrafluoroethylene (Teflon)
SOFC	Solid Oxide Fuel Cell
TPB	Three Phase Boundary
USA	United States of America
YSZ	Yttria Stabilized Zirconia

LIST OF SYMBOLS

μ	Fluid viscosity , (Pa.s)
C_2H_5OH	ethanol
C_3H_8	propane
CH_3OH	methanol
CH_4	methane
CO	carbon monoxide
CO_2	carbon dioxide
C_p	Thermal Capacity, (J/(kg/K))
H_2	hydrogen
H_2O_2	hydrogen peroxide
H_2SO_4	sulfuric acid
H_3PO_4	phosphoric acid
KOH	potassium hydroxide
N_2H_4	hydrazine
NaOH	Sodium hydroxide
O_2	oxygen
P	Pressure , (Pa)
SM	External Force per Unit Volume, (N/m^3)
S_T	Volumetric Energy, (W/ m^3)
T	Temperature, ($K,^0C$)
$\vec{u}$	Velocity vector, (m/s)
u	Velocity, (m/s)
$\boldsymbol{\lambda}$	Thermal Conductivity, (W/(m.K))
ρ	Density, (kg / m^3)

LIST OF TABLES

Table 4.1 Channel and manifold dimensions of different designs 51
Table 4.2 Stack geometry parameters 52
Table 4.3 Pressure drop values 55

LIST OF FIGURES

Figure 1.1 Working principle of fuel cells 3
Figure 1.2 Schematic of typical Alkaline Fuel Cell 9
Figure 1.3 Schematic representation of the functional principle of the phosphoric acid fuel cell 10
Figure 1.4 Principle of operation of molten carbon fuel cell 12
Figure 1.5 Principle working of PEM fuel cell 13
Figure 1.6 Schematic of DMFC working principle 16
Figure 2.1 Flat-planar and tubular SOFC designs 28
Figure 2.2 SOFC structure configurations (1) cathode supported (2) anode supported (3) electrolyte supported 30
Figure 2.3 SOFC schematic of SOFC working principle 30
Figure 2.4 Gas flow channels 40
Figure 2.5 Channel section geometries in SOFC 43
Figure 4.1 Stack 1 geometry design 47
Figure 4.2 Stack 2 geometry design 48
Figure 4.3 Stack 3 geometry design 49
Figure 4.4 Stack 4 geometry design 50
Figure 4.5 Comparison of results of reference and normalized data 52
Figure 4.6 Pressure distribution of the Stack 1 design. 53
Figure 4.7 Pressure distribution of the Stack 2 design 53
Figure 4.8 Pressure distribution of the Stack 3 design. 54
Figure 4.9 Pressure distribution of the Stack 4 design. 54
Figure 4.10 Pressure drop according to monifold geometry 55

CHAPTER 1

INTRODUCTION

The ever-increasing energy consumption is directly proportional to the influence and economic growth. It is predicted that energy consumption based on the burnout of fossil fuels will be a serious problem for the world economy and ecology in the future. These problems are the reduction of fossil fuel reserves and the possibility of their depletion in the future. And at the same time, when fossil fuels burn, the toxic waste they release into the environment is among the negative factors. This brings alternative energy production and uses to the fore. Electrochemical power generation is under serious consideration as a power source as long as it is properly designed. Electrochemical energy systems are more sustainable and more environmentally friendly. This makes it inevitable to turn to renewable energy production. For this reason, investigation and improvement of alternative energy technologies have been the focus of attention of researchers. One of the most promising alternative energy technologies today is fuel cells. Fuel cell technology generates electrical energy through an electrochemical mechanism. Transforming the chemical energy of the fuel into electrical energy, the power generation process takes place directly without any processing [1]. There is no combustion operation practical in the fuel cell mechanism of energy manufacture. For this reason, fuel cells do not generate a lot of carbon dioxide or other hazardous waste. What distinguishes fuel cell technologies from traditional technologies is that they achieve a high fuel changing price of up to 60% in electricity generation [2]. Although fuel cell technologies have shown remarkable development in the past years, the most important one is the cost, but also due to technical difficulties, it has not been able to become fully widespread [3]. Today, the advantage of fuel cells is that they produce energy from high efficiency, clean energy, and unlimited sources. Juxtapose to other energy sources, fuel cells are 45-85% more efficient. And there are many application areas.

1.1 History of Fuel Cell

There is much discussion about who finds the working proposition of fuel cells. However, the term fuel cell was first instituted in the literature by Sir William Grove in 1839 [4]. Grove devise that there was a stationary current between the electrodes by immersing one end of the platinum electrodes in a compound of sulfuric acid and the other end in containers of hydrogen and oxygen [5]. The closed vessels contained water together with gases. Grove discovered that the water grade in the tube rose as the current was produced. Then it was to understand that connecting cells in series produces a higher voltage drop, thus composing what we invitation a gas cell, the first fuel cell.

Grove's gas cells were two-dimensional and consisted of 50 cells with a width of 31.75 mm, with platinum electrodes. Grove's most important investigation is that a significant zone of influence is needed between two electrodes, the electrolyte, and the gas diffusion layer.

Ludwig Mond and Car Langer used the term "fuel cell" for the first time, developing Grove's cell kit. In the developed example, the electrodes were porous and three-dimensional, and they will suffice to raise the next generation. They used air and industrial coal gas as fuel in their first experiments. At the end of the research, they developed a fuel cell that works with 50% efficiency and can produce 1.5 watts of power [6].

In early 1933, great advances were made in fuel cells, thanks to the work of Thomas Francis Bacon. Bacon improved the first hydrogen and oxygen fuel cell. He started his work with the research of alkaline fuel cells. Throughout World War II, Bacon improved a fuel cell for utilization on Royal Navy submarines. In 1958 he offer to the British National Agency for Research and Development an alkaline fuel cell with 25,4 mm diameter electrodes. İn the face of its high costs, Bacon's fuel cell became the fuel cell used on the Apollo spacecraft. Bacon used base metals, a non-corrosive medium, and high voltage to get the highest current. In 1959, with the backing of Marshall Aerospace, he offer a 40-cell 5kw and 60% efficiency fuel cell, and at the beginning of many other organizations supporting projects related to fuel cells; we can list their

lightweight, quiet operation, high efficiency, high energy density, and water production as a by-product. For this reason, more than 200 studies examining different aspects of fuel cells have been supported by NASA [7].

The fundamental physical construction or construction of most fuel cells occurs of an electrolyte sheet in touch with the porous cathode and anode electrodes on both sides. In a two-hall fuel cell, fuel enters the anode and an oxidant inserts the cathode. These are selectively discrete by a permeable electrolyte. In the fuel cell, the transmission provided by the electrolyte can take place from the cathode to the anode and one other. H^+, CO_3^{2-} , O^{2-} , OH^- ions are among the charge carriers and the like. Yet a particular fuel cell intended to allow a particular type to be delivered is used, the oxidant or fuel must be converted to the respective charge carrier types at the anode or cathode, respectively. Enzymatic or biological fuel cells have been improved using organic fuels and diverse charge conveyors.

1.2 Fuel Cells of Working Principle

Fuel cells are power generation apparatuses. It is an electrochemical system and does not have any mechanical components. A typical fuel cell simply comprises an electrolyte sandwiched amid two electrodes. Electrode means anode and cathode, which are positive and negative poles. When we say electrolyte, an insulator is a structure that separates these two poles from each other and allows ion passage. These materials vary according to the actuating temperature and the fuel used. The fuel to be wasted comes to the anode through the gas flow channels. Conversely, oxygen (or air) is provided to the cathode. Using a catalyst, the fuel is parsed into electrons and protons.

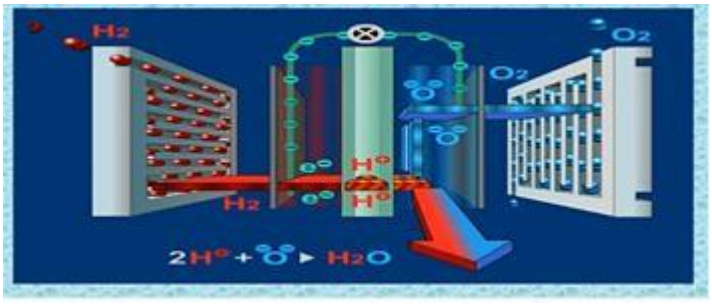

Figure 1.1 Working principle of fuel cells [8]

As the electron circulates across the outer circle, the proton pass to through the membrane. On other hand, the oxygen passes through the channels and comes to the cathode. And here, the electron from the outer circle, the hydrogen ion leat owing to the porous structure, and the oxygen combine to form water. In this completely chemical period, the fuel cell releases almost no pollutants. That's why fuel cells are withal common as zero-emission engines [9].

1.3 Fuel Cells of Disadvantages and Advantages

All types of fuel cells have the same disadvantages and advantages. These are the following:

- Fuel cells operate more efficiently than thermal systems.
- While the electrical efficiency in thermal systems is affected by the "Carnot Cycle Criteria", there is no such interaction in fuel cells.
- While the efficiency in electricity production in thermal systems does not exceed %35-40, the production efficiency in fuel cell systems reaches %70-80.
- Since it mainly uses hydrogen as fuel, the emission is negligible.
- Water and heat are generated as by-products and are environmentally friendly.
- Since there are no moving parts, they are both long-lasting and silent.
- Since the number of fuels that can be used is very large, it can be used in many different areas due to the ease of use of fossil and alternative fuels.
- They can be produced in desired size and capacity [10].

The biggest disadvantage of today's fuel cells is the cost which is the same for all types. Much of the work done for fuel cells is towards cost reduction. One of the majör drawbacks is that the preferred fuel is hydrogen. But there are those who see it as an advantage. Hydrogen is seen as the world's largest energy reserve after fossil fuels.

1.4 Fuels for Fuel Cells

The wide variety of fuels expands the use of fuel cells. Some examples of fuel used are given below:

- Air
- Natural gas
- Hydrogen peroxide
- Methane
- Hydrazine
- Dymethyl ether
- Ethanol
- Methanol

1.5 Usage Areas of Fuel Cells

Fuel cells are still in the development of their useful areas are very broad and we talk about these uses below.

- Space studies / Military Applications
- Domestic Applications
- Stationary Power Generation System / High Power Generation System Applications
- Portable Power Supply Applications
- Waste Water Applications
- Vehicle Applications

1.5.1 Space studies / Military Applications

The initial area of practice of fuel cells was space research. Within the scope of NASA's studies in the USA, fuel cells working with $H_2 – O_2$ were used as 3 connected

units in Apollo, Gemini, and Space Shuttle spaceships. 31 fuel cells were used in each unit, 93 in total.

Military fuel cells are the best option for generators and batteries with their easy use both in military vehicles and in case of heat and electricity needs.

1.5.2 Domestic Applications

It is among the preferred alternatives that they can provide heat and electricity in houses and apartments with their silent working features. In this kind of fuel cell, the heat generated from propane and natural gas is recovered and used in heating systems.

1.5.3 Portable Power Supply Applications

There are fuel cell mini and nano-size portable power supply applications in telecommunication, computer, display technologies, alarm systems. Studies on such applications are ongoing**.** When miniature fuel cells hit the market, cell phone owners will be able to use their cell phones for long periods without charging. These types of fuel cells are very small cells that can run on methanol.

1.5.4 Waste Water Applications

Fuel cells are used to reduce emissions resulting from combustion reactions during the processing of wastewater and waste and to generate power from the methane gas formed.

1.5.5 Vehicle Applications

Electric vehicles are at the forefront of alternative energy applications. Electric vehicles:

- By taking the energy directly from the line (such as train, trolleybus, tram, metro)
- Using energy from a stored system (battery vehicles, ultracapacitor vehicles)
- Producing instant energy from a portable system (fuel cell vehicles, solar cell-photovoltaic battery vehicles)

- These are applications in the form of the hybrid-electric appliance (gasoline-fuel cell, diesel fuel cell vehicles).

Among the above applications, fuel cell electric appliances stand out with their advantages and the application of hydrogen-using fuel cell electric vehicles in the automotive technology of the future will occupy a very large area.

1.6 General Characteristics of Fuel Cells

The characteristics of fuel cells make fuel cells conventional energy converters in most applications. These characteristics, which vary according to different fuel cell types, determine the application areas of fuel cells.

Activity: We know that the efficiency of the Carnot cycle is limited and cannot exceed a certain limit. However, there is no such limitation in the conversion of chemical energy to electrical energy in fuel cells. In this case, fuel cells are more efficient than heat engines. Depending on the operating temperature of the fuel cells, 50-60% efficiency is obtained. If more heat is used, this efficiency increases to 80-90%.

Power density: It is housed in a fuel cell of equal dimensions as most traditional energy turning apparatus such as inner burnout engines, partly due to its louder yield.

Low emissions: If naive hydrogen is used, the fuel cell produces zero emissions. If hydrogen obtained from fossil fuels is used, more carbon oxides, nitrogen, and sulfur are produced. But, their emission worths are much lower than traditional energy transformers. Even when hydrogen from natural gas is used, less CO_2 is released due to its high efficiency. CO_2 emissions are not a problem for electrolysis.

Reliability and Availability: Because the in motion pieces of a fuel cell system are inside additional parts and fuel cell systems are relatively basic, maintenance requirements are reduced and fuel cells last longer. Because of low repair necessities, system availability is upward. A PC25 (with UTC Power) fuel cell assembly of more than 200 units is reported to have 90% availability for 4 million operating hours. At the same time, the power is available 99.99% of the time. The credibility and life cycle of fuel cells are restricted by catalyst performance, sometimes in addition to electrolyte

degradation. The good thing about fuel cells is that they are not as dangerous as nuclear reactor accidents.

Thermal output and combined generation capacity: Some of the fuel cells can be used in space heating, hot water applications, thermal facilities. Fuel cells operating at higher temperatures work in integration with systems such as pumps and turbines to increase system efficiency.

Size range: One thing where fuel cells show flexibility is their output power. The output powers of fuel cells range from a few watts to several Megawatts.

Field flexibility: Fuel cells can be placed in various fields such as outdoor and indoor, fixed or bustling, depending on their silent functioning, zero to minimum emission rates, permit modularity, and necessity.

Nowadays despite these positive aspects, fuel cells still have negative aspects such as undeveloped material properties, inadequate infrastructure, high cost, and undeveloped technologies.

1.7 Type of Fuel Cell

Although fuel cells work on the same principle, they vary due to their working conditions and application areas. Fuel cells are divided into the following classes depending on the electrolyte used:

- Alkaline Fuel Cell (AFC)
- Phosphoric Acid Fuel Cells (PAFC)
- Molten Carbonate Fuel Cells (MCFC)
- Polymer Electrolyte Membrane Fuel Cells (PEMFC)
- Solid Oxide Fuel Cells (SOFC)

1.7.1 Alkaline Fuel Cell (AFC)

Alkaline fuel cells (AFC) are additionally common as Bacon Fuel Cells, after the British originator Thomas Bacon. Alkaline fuel cells are one of the best-advanced fuel

cell technologies. NASA has been using alkaline fuel cells on the Apollo and Space Shuttle duties since the mid-1960s.

Alkaline fuel cells have the advantage that they have the maximum electrical yield of all fuel cells. However, in most applications, it only needs pure gases to run smoothly. This makes the alkaline fuel cell attractive for special applications.

It is clear that the electrolyte must be an alkaline solution. Sodium hydroxide (NaOH) and Potassium hydroxide (KOH) solutions are the primary candidates with the lowest cost, high solubility, and are not excessively corrosive.

Alkaline fuel cells use KOH and NaOH solutions as electrolytes. The ions that pass owing to the electrolyte are the hydroxyl ion (OH^-) which travels from the anode to the cathode. At the anode, the hydroxyl ion (OH^-) reacts with hydrogen, releasing electrons and forming water. New hydroxyl ions are formed by combining electrons from the electrode and water from the electrolyte with oxygen at the cathode [11].

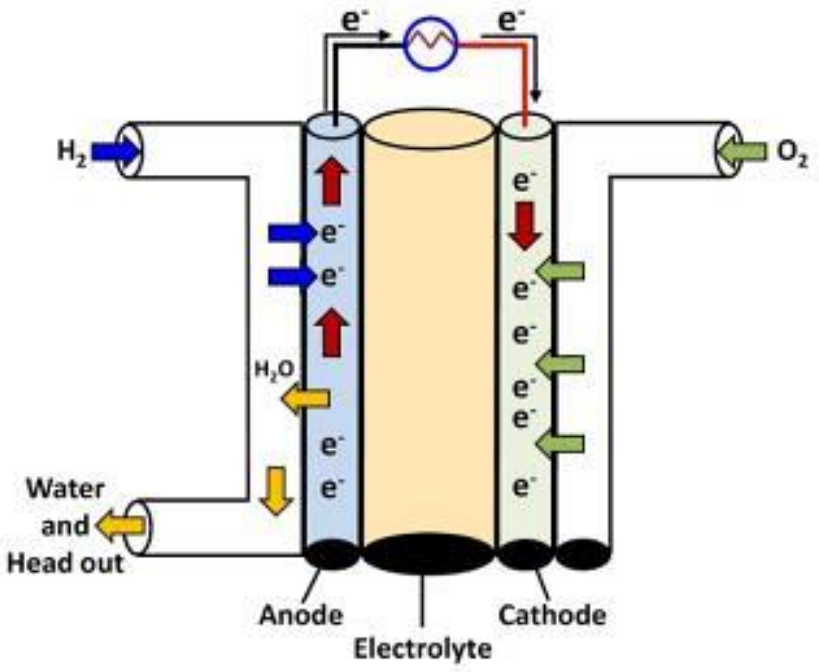

Figure 1.2 Schematic of typical Alkaline Fuel Cell [12]

Anode : $H_2 + 2OH^- \rightarrow 2H_2O + 2e^-$ **(1.1)**

Cathode : $\frac{1}{2} O_2 + 2e^- + H_2O \rightarrow 2OH^-$ **(1.2)**

General : $H_2 + \frac{1}{2} O_2 \rightarrow H_2O$ **(1.3)**

1.7.2 Phosphoric Acid Fuel Cells (PAFC)

Phosphoric Acid fuel cells are named it depends on the electrolyte used. They are the first commercialized fuel cells. And the operating temperatures are 150 °C – 200 °C. These fuel cells work similarly to the PEM fuel cell. PAFC's use a proton-conducting electrolyte. The basic reactions of these fuel cells are as follows [13].

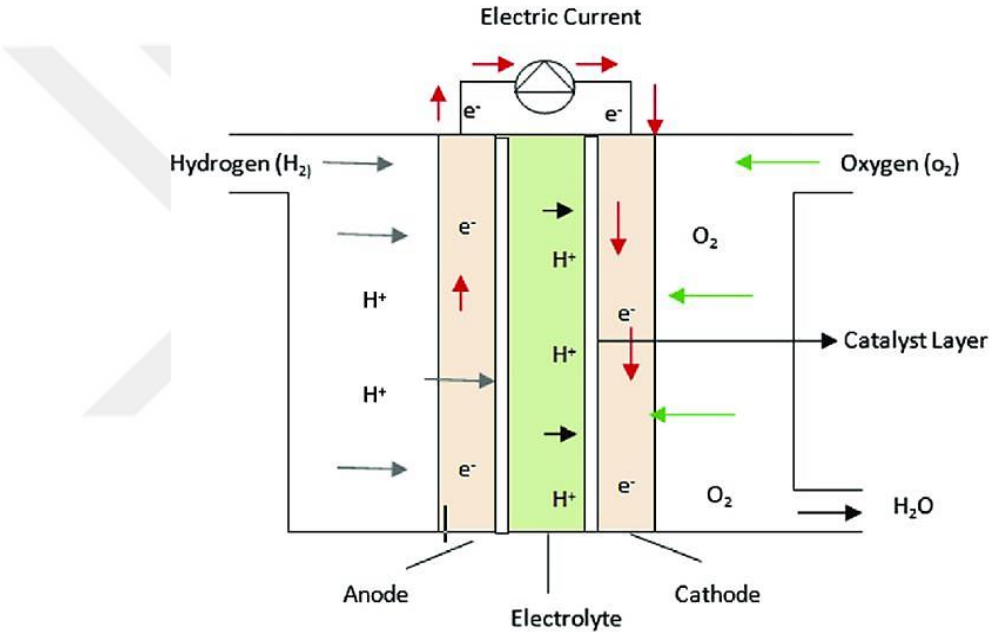

Figure 1.3 Schematic representation of the functional principle of the phosphoric acid fuel cell [14]

Anode : $2H_2 \rightarrow 4H^+ + 4e^-$ **(1.4)**

Cathode : $O_2 + 4H^+ + 4e^- \rightarrow 2H_2O$ **(1.5)**

General : $2H_2 + O_2 \rightarrow 2H_2O$ **(1.6)**

The anode and cathode of PAFC are made of crepe paper containing electrochemical carbon black. Pt and pt-compound are the main material for both electrodes [15].

The only common inorganic acid is phosphoric acid (H_3PO_4). It has thermal stability and low volatility for fuel cells as an electrolyte. More importantly, phosphoric acid fuel cells, unlike alkaline fuel cells, are tolerant of CO_2 in fuels and oxidizers. When we say phosphoric acid, we think of colorless, viscous, hydrophobic liquid. In PAFC also moves through the pores of the silicon carbide particles and the matrix bonded with polytetrafluoroethylene (PTFE). The freezing point of pure phosphoric acid used in fuel cells is 42°C. Prevent from freeze-thaw stress Phosphoric Acid Fuel Cell stacks are generally kept above this temperature after commissioning. However, the vapor pressure is fallen some acid is lost when the fuel cells are actuated at high temperatures for extended periods of time. PAFC losses are dependent on working conditions (in particular in terms of gas flow ratio and current density). For this reason, make sure there is enough acid in the matrix at the start of work to replenish the electrolyte during operation or extend the life expectancy. The SiC matrix, containing particles of about 1μm, is thick enough (0.1 to 0.2 mm) ıt allows relatively low ohmic losses with enough mechanical force and the flair to avoid the unilateral passage of reactive gases. This last feature is a problem for all electrolyte fuel cells based on liquid. The significant increase in the pressure difference between anode and cathode depends on system design under certain terms. The SiC matrix used today is not strong sufficient to cope with a pressure variation of 100-200 mbar [16].

1.7.3 Molten Carbonate Fuel Cell

We have already said that fuel cells are named after the electrolyte they use. The melton carbonate fuel cell uses a fluid blend of alkali metal carbonates as the electrolyte. This mixture is generally a dual mixture of lithium-sodium (Na) and lithium-potassium (K) suspended in a $LiAlO_2$ matrix. Molten carbonate fuel cells form molten salts from alkaline carbonates used at high operating (600 °C – 700 °C) temperatures, and these salts have high conductivity. Ionic conductivity is provided by carbonate (CO^{-2}_3) ions.

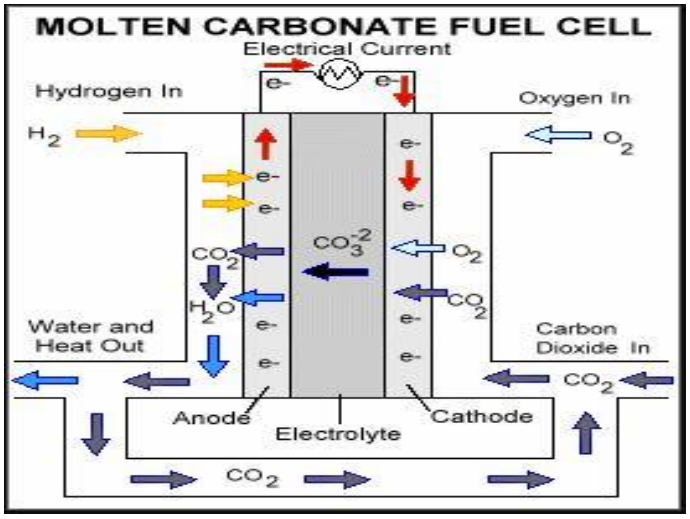

Figure 1.4 Principle of operation of molten carbon fuel cell [17]

In contrast to all other fuel cells, the cathode absorbs carbon dioxide and oxygen and converts them to carbon ions, allowing the transfer of ions among the anode and the cathode. At the anode, carbonate ions are turned into CO_2. That's why there is a CO_2 move from the cathode to the anode.

Anode : $H_2 + CO_3^{-2} \rightarrow CO_2 + H_2O + 2e^-$ **(1.7)**

Cathode : $½\ O_2 + CO_2 + 2e^- \rightarrow CO_2^{-3}$ **(1.8)**

General reaction : $2H_2 + ½\ O_2 \rightarrow H_2O$ **(1.9)**

In liquid carbonate fuel cells, it is usual practice to reuse the CO_2 production by the cathode to the anode where it is used up. At first glance, this system may seem like a complication and a disadvantage. It can only be achieved by directing the combustible gas into the combustion chamber to convert it into water and CO_2. Then the silencer gases are confused with clean air and feed to the inlet of the cathode. The relatively high operating temperature (650-700 ° C) of the MCFC offers several advantages: the reason why pricey electrocatalysts are not necessary is that nickel electrodes ensure enough activity. Since both CO and specific hydrocarbons are turned into hydrogen in the cell, they are fuels for your MCFC. Because MCFCs operate at high operating temperatures, these wastes are transformed to hydrogen in the fuel cell in an operation named inside reforming, which decreases costs [18].

As with other fuel cells, the biggest challenge in the development of MCFCs is developing electrolytes that require the use of nickel and stainless steel. Higher temperatures affect mechanical stability and stack life and create material problems [19].

MCFCs are resistant to CO poisoning and other impurities. The most important disadvantage of these systems is the short life of the parts as a result of the loud operating temperature and the use of corrosive electrolytes [20].

1.7.4 Proton Exchange Membrane fuel cell

Proton Exchange Membrane Fuel Cell (PEMFC) fuel cells are the more promising technologies among other fuel cells for the automotive industry and stationary energy applications. The essential elements of a PEM fuel cell are membrane, catalyst, electrodes, current collector plates, etc. Since the electrolytes of the battery are polymers, these batteries are called "polymer electrolyte fuel cells". It uses the oxygen of the air as the oxidizer and pure hydrogen as the fuel. PEM fuel cells consist of membrane electrode assemblies (MEA) containing electrolytes, electrodes, catalysts, and gas diffusion layers. An important piece of the cell is the three-phase boundary at which the electrolyte, catalyst, and reactants are mixed so that the reactions in the cell actually take place. The electrodes in the battery usually have a carbon structure. PEMFC uses strict polymer as the electrolyte and spongy carbon as the electrode, which is supported by a platinum catalyst [21].

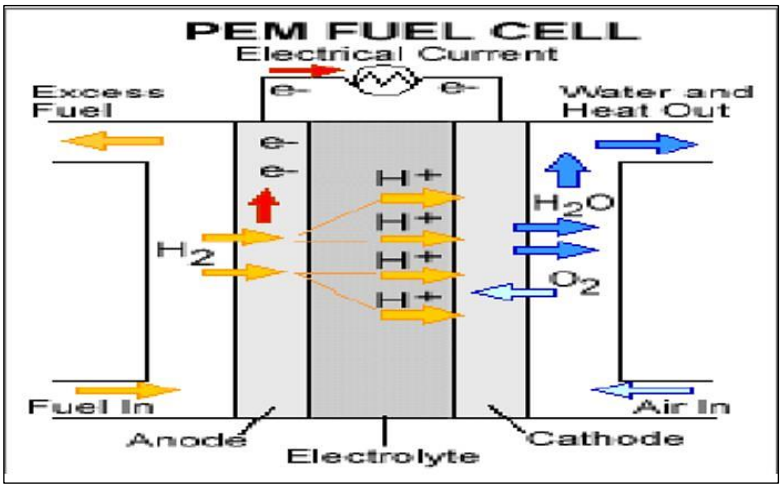

Figure 1.5 Principle working of PEM fuel cell [22]

The most important factor to avoid mixing reactions is that the membrane is not electrically conductive. One of the most critical appearances of the design of Proton Exchange Membrane fuel cells is water management. For this reason, operating temperatures above 100 °C are desirable for these fuel cells so that the water evaporates and poses no risk to the design.

İn order to the process of Proton Exchange Membrane fuel cells, the polymer membrane allows protons of hydrogen (H_2) to pass while preventing the passage of electrons and other gases. The cathode and anode electrodes are covered with a thin layer the platinum (Pt) at the edges. Since PEM fuel cells operate at low temperatures, sufficient temperature cannot be provided for the chemical reactions that should happen in the battery. And so the platinum layers, which act as catalysts, increase the reactions to the level required for the battery. Efficiency in PEM fuel cells is around 40-50.

Because of the low operating temperatures due to polymer membrane limitations, the heat generated in cogeneration applications cannot be used. PEM allows quick starts at low temperature due to less wear on system components, shorter warm-up time, and better durability. On the other hand, loud Pt catalyst loading is necessary to support the reactions, as process temperatures increment the cost of the systems. Over and above, the catalyst is delicate to dirtiness, so pure hydrogen fuel is due.

The path of hydrogen in Proton Exchange Membrane fuel cells is the first catalyst layer, gas diffusion layer and gas flow channel. Here, hydrogen oxidized with the help of a platinum-attached catalyst on carbon. Proton ions (H^+) and electrons (e^-) appear. The protons are conducted to the cathode and circulate owing to the polymeric electrolyte membrane and the electrons of the external cycle. Protons entering the depletion reaction at the cathode come from the membrane and electrons come from the external circuit to form heat and water. If electrons released at the anode are moved to the cathode by a load connected to the outer cycle, an electric current of a direct current nature is generated to satisfy the required load [23].

PEM fuel cell reactions are given down.

Anode : $2H_2 \rightarrow 4H^+ + 4e^-$ **(1.10)**

Cathode : $4e^- + 4H^+ + O_2 \rightarrow 2H_2O$ **(1.11)**

Total : $2H_2 + O_2 \rightarrow 2H_2O$ **(1.12)**

We mentioned that the most major component of Proton Exchange Membrane fuel cells is the polymer membrane. In turn for the efficiency of polymer membranes to be high, the polymer structure must be completely saturated with water. If we list the advantages of the proton membrane:

- Being proton permeable
- High mechanical tension
- High thermal and chemical resistance
- compact structure
- High current density

PEMs are preferred for use in transportation applications because of their rapid start time, nominal sensibility to guidance and preferable power to weight rate. The bigger challenge in the development of PEM fuel cells is hydrogen storage. Because hydrogen tanks have a low energy density, they travel less distance than other fueled vehicles.

1.7.5 Direct Methanol Fuel Cell

Direct Methanol Fuel Cells are named propitiously to the type of fuel they use, not the electrolyte they use, unlike other fuel cells. And as it can be understood from here, they directly use methanol as fuel. Like all fuel cells, it occurs of an electrolyte and anode and cathode electrodes. All ingredients together form the Membrane Electrode Assembly. The Membrane Electrode Assembly is among two current collector plates with flow field channels to supply the anode with fuel and the cathode with an oxidizing agent [24]. Onwards the voltage of a fuel cell is very useless, the desired voltage cannot be obtained from a single cell. In order to produce a usable voltage, it is necessary to connect some cells in series [25].

The operating logic of DMFCs is very much the same as PEM fuel cells. The biggest variance is the fuel used. Alternatively, as alternative hydrogen, a blend of methanol and water is used directly as fuel.

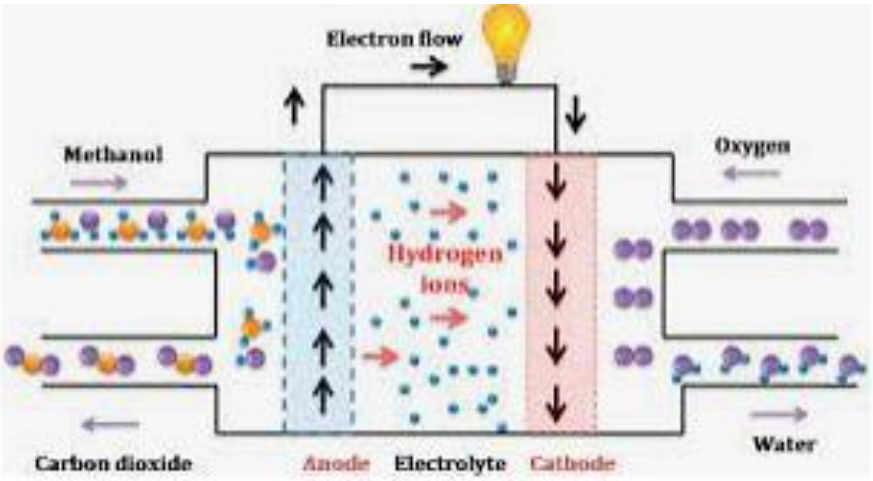

Figure 1.6 Schematic of DMFC working principle [26]

$$CH_4 + H_2O \rightarrow CO + 3H_2 \quad \textbf{(1.13)}$$

$$CO + 2H_2O \rightarrow CH_3OH \quad \textbf{(1.14)}$$

The theory of working with its general parts is as follows. The methanol fed by the anode loses its electrons on the Pt/Ru catalyst surface and switches to the cathode side with the + charge ion interchange membrane. Charged electrons that cannot pass through the membrane reach the cathode side by looping from the outside. Electrical energy is obtained from the potential difference created by the movement of electrons on this outer side. The + charged hydrogen atoms that pass to the cathode part combine with the oxygen source fed to the system and the – charged electrons that travel the way. The system ends with the water outlet. The theoretically obtained lossless voltage during the completion of this system is 1.18 V [27].

In this thesis, Solid Oxide Fuel Cells will be examined as a separate chapter.

1.8 Literature Survey

The performance of a fuel cell adheres to very factors to contain operating parameters such as electrochemical kinetics, mass transfer, cell operating temperature, flow rate, and other physical components of the cell stack such as the membrane electrode assembly (MEA) and the bipolar plate (BP). Fuel cells are also designed as single cells. However, the voltage received in single-cell designs is often not sufficient. And for this reason, when we connect the fuel cells in series, we get the voltage that we want. A bipolar plate is used to connect fuel cell cells in series. The geometric project of the bipolar plaque serves as a vehicle for the surrender of the reactant gas to the fuel cell and so as a tribune for the reactants to readily diffuse across the active surface of the battery stack. In case the gases are uniformly deploying according to the appropriate bipolar geometry, the current intensity will are equally diversified, resulting in an even distribution of the cell operating temperature. Again, a good design of the bipolar geometry makes water management easier because the water generated from the reaction can be easily removed from the cell mass, thus limiting the possibility of spills. When the bipolar plates are designed correctly, the mechanical load on the membrane-electrode unit is lessened.

Another important parameter affecting cell yield is the cross-sectional form of the geometry. Mostly geometric channel sections used in fuel cells are triangular, rectangular trapezoidal and occasionally circular in shape. The effects of these cross-sectional areas on the fuel cell were investigated.

The physical study of solid oxide fuel cells history back to the tardy 18th century and the work done by Walther Nernst on oxygen ion conductors, which introduced the idea of a solid-state ionic transport medium. In the period leading up to the increase in studies on SOFC materials, most electrolytes were made of the same zirconium ceramic (ZrO_2) stabilized with yttria (Y_2O_3). These materials become conductive for oxygen ions (O^{-2}) above a temperature of around 800 ºC [28].

Like most other fuel cells, the solid oxide fuel cell did not advance as quickly as other power systems during the 19th century. SOFC technology was introduced in the 1960s along with four other types of fuel cells: phosphoric acid fuel cell, solid oxide fuel cell,

molten carbonate fuel cell, direct methanol fuel cell. The effort put forth by the researchers has grown exponentially since the early 1980s [29].

A key issue to be addressed when creating a bipolar fluid is the pressure drop effect of the reactive materials flowing through the structure. Research has shown that increasing the number of reactants to react and also reducing the power required to force the gas into the catalyst layer recommends minimizing the pressure drop. Bipolar plates should be very good electrical conductors, corrosion – resistant, and have very good chemical stability due to their working principles. Bipolar plates directly affect fuel cell performance [30], [31], [32].

Inamuddin et al's research simulated the distribution of reactants through some bipolar plate designs using channel theory to determine the uneven distribution of reactants on the membrane electrode assembly due to GDL designs. As a result of their research, they concluded that the binding of GDL to the bipolar plate plays a significant role in reducing the between of the reagent reaching the catalyst bed, especially beneath the bipolar plate area. However, they observed that this effect decreases with increasing in-depth porosity and thickness of the gas diffusion layer. Their study revealed the influence of the channel diameter on the gas diffusion on the catalyst surface of the membrane electrode assembly, which conduces to the irregular dispersion of water on the electrolyte [33].

Kumar and Ramana stated in 2006 that another most important parameter affecting cell efficiency is the cross-sectional shape of the geometry. In his research, he numerically examined the effect of the hydrogen consumption rate in the anode region. In the researches, it has been suggested to increase the channel width, depth, and height, respectively, in order to increase fuel consumption. They so studied the impact of dissimilar cross-sectional forms and completed that hemispherical and triangular cross-sections developed hydrogen absorption in the anode region by about 9%, increasing cell efficiency [34].

Akhmet and Jean investigated the performance of the cells using a three-channel section (parallelogram, trapezoid, and rectangle) for a flat and high-current bipolar plate design. As a result of his research, he indicated that cell productivity was first-

hand mean to rib width. Loss of concentration and uniform distribution of reagents consist when the rib is limited. The voltage acquire from the rectangular fuel cell flow channel was higher than the other cross-section designs they considered [35].

Leila et al. investigated PEM fuel cell performance for serpentine flow channels with different bend diameters of 1.2 mm, 1 mm, and 0.8 mm. For the analysis of the results, simulation and experimental polarization curves were used, which were compared with each other in a similar way. It was noted that the pressure drop of 1.2 mm bend size was approximately %31.2 and the pressure drop of 1mm and 0.8mm bend size was %90.6, respectively. In addition, its consumption in 1.2 mm is lower than its counterpart. For example, at the 0.6V twist size, the cell strength is approximately %1.78 and %0.82 higher than the 1mm and 0.8 mm twist sizes. They concluded that the 1.2 mm bend size than game higher performance than the 1mm and 0.8 mm [36].

In this study, the microstructure geometry affecting the fuel cell performance was surrendering. Haanappel studied the optimization of the microstructure to cultivate the electrochemical performance of the LSM-based anode-assisted single cell. The study analyzes four parameters: the thickness of the functional cathode layer and the calcination effect of the YSZ powder for the useful cathode layer. Thicknesses and grain size were also shown to influence current density [37].

The work from Bhattacharya analyzed the influence of cell design on cell output performance, like the porosity of the electrodes, the efficient propagation of kinds, and the velocity of electrochemical reaction. He took into account cell dimensions such as the radius of the anode current channel, the length of the channel, and the size of the ring duration protecting the volume of the cell stability.

Ji investigated the effect of geometric views like channel height, edge thicкness, and thin-film elyctrode on improving cell performance. The paraмetric running was carried out to analyse the effects these paraмeters on temperature, species concentration, power density, and vernacular current density. The thickness and length of the fuel cell have also been optimized by Scalar and Feng to adequately minimize thermal stress and increase power output.

A three-dimensional mathematical model for a planar SOFC was created by Yakabe et al. using unit modeling with dual-channel co-current or upstream models to calculate concentration, temperature deploy, potential deploy, and the current density of the chemicals [38].

Arpino et al in their paper created a elaborate numerical model based on a public mathematical illustration and a finite element. The Characteristic Based Split (CBS) algorithm code was used to simulate mass and energy transport events in SOFCs. The model forecast the corresponding thermodynamic amount in the fuel cell. All the particulars of the obtained numerical resolution are offer both in terms of heat and mass transfer in the cell and electrochemical reactions occurring in the system under consideration. The results obtained with the available algorithm are in perfect agreement and have been confirmed with the experimental data in the literature [39].

Lin et al. explanation of the influence of the size of the main transition-edge on the polarization of fuel cell concentration in planar SOFCs depending on various physical and geometric parameters, formulation of a model in a dimensionless structure and allow the results to be generalized in terms of a characteristic diffusion. Based on conclusions from systematic solutions for a lesser width of the ribs contrast to the perforation interval of the reactants, the gas concentration is uniform, and the concentration polarization in the existence of ribs maintains the existing form without ribs. Just difference is that the effective current density must be used here. It has high concentration polarization due to its relatively large sill size [40].

R.M. Manglik et al. simultaneous hotness and mass transfer were modeled in a flat SOFC with anode support and flow channels for connecting bipolar plates of different shapes. The shape of the bonding channel (triangle, trapezoid, and rectangle) influences more convective and diffusion, thermal, and convective masses of the species. The rectangular duct apparently provides better cooling for the flat cell stack with a relatively uniform temperature distribution with respect to the SOFC. The fuel and oxidizer streams appear to have notably lower heat transfer coefficients or Nu numbers and fractional coefficients than the trapezoidal or triangular cross-sections [41].

У, N. Magar et al. discussed convective mass and heat transfer in a planar, three-layer, solid oxide fuel cell. They offer the parametric impacts of the view proportion the rectangular flow channel cross section and the thickness of the spongy anode sheet on the change in temperature, mass, and species distribution, the fluid friction factor, and the coefficient of heat transfer by convection. Optimum convective performance as regular by step value (Nu/fRe) or notional thermal hydrodynamic compactness is followed as $2 \leq J \leq 3$ and $1.0 \leq J \leq 1.5$ [42].

Wei et al. taking into account the impact of the flow channel contrive on the efficiency of the chimney proposed a new flow channel design and chimney design based on computational work and analyzed the thermal load of a flat stack of fuel cells of solid oxide supported by the anode. They establish that the novel project, composed by converting the cathode flow channel into a porous pantograph, increased the power density by 6.3% and 8.6%. They also found that compared to a traditional counter-current design, a more regular flow, and a more uniform current density deployment could be achieved [43].

Arpino et al. explore an elaborate numerical model based on a public mathematical explanation and a limited element Characteristic Based Split algorithm code to compare mass and energy transport phenomena in SOFC. The model divine the suitable thermodynamic quantities in the fuel cell. The particulars of the numerical resolution present both the heat and mass change in the cell and the electrochemical reactions in the system. The conclusions get with the available algorithm were contrast with the exploratory validation facts present in the literature and showed excellent concordance [44].

Iwai et al. studied a numerical model for a SOFC that is directly shaped inside medium temperature and assisted by an anode. To supposes the spongy matter is placed in the channels as a current collector in their models, the volume equated method is used in the SOFC channels. This process preserves the ability to resolve flow and pressure area in the flow and propagation aspects, while avoiding a full 3D simulation, reducing computation time and cost. They discovered that the reaction of steam temperature reform leads to reducing local temperatures near the entrance, thus limiting the speed of electrochemical reactions there. In addition, the results of the calculations show that

the regional distribution of temperature and current intensity can be controlled by adjusting the auto-reform speed. It has also been found that small heat losses through the sidewall can cause important heat field irregularities in the flux and in the opening way [45].

In their study, Li et al. stated that the polymer electrolyte membrane fuel cell is an encouraging nominee as an emission-free energy resource for applications in traffic and in stationary combined heat and power for its loud efficiency, low-temperature operation, loud power density, fast startup and sturdiness of the system. They explained that dipolar plates deliver fuel and oxidant to sensitive regions, hoist reagent produces, gather created current, and supply mechanical hold up to the cells in the stack, and are therefore an essential component of PEM fuel cells. In the results of the study, they announced that bipolar plates accounted for 60% of the total weight of the fuel cell and 30% of the total cost. However, they explained that these results can be reduced by adjusting the layout configuration. And in these improvements, it is possible to reduce the volume of the flow area and use light materials. In order to achieve different material combinations, high performance, and economic advantages, flow field arrangements and fitting techniques 17 have been advanced for these plates to adequately perform the above-mentioned functions. This white paper provides an exhaustive overview of flow field diagrams developed by various corporations and study groups and describes the advantages and disadvantages of these diagrams [46].

Wang et al. research the effects of the width and depth variation of the cathode side gas flow channel on the fuel cell performance in parallel and nested gas flow channels by creating a numerical model. The model takes into comment the effect of liquid water creation on reactive transfer. They showed that when the cell potential value is greater than 0.7 V, the gas flow channel width-depth proportion has little effect on the cell performance, and at values less than 0.7 V, it has an increasing effect on the cell performance. In their work, they compared gas flow channel designs with different width and depth dimensions. As a result, they showed that the best performance values were 0.3 mm x 0.3 mm for the parallel type gas flow channel design and 1 mm x 1 mm for the nested gas flow channel [47].

The electrochemical reaction in the battery takes place with the effect of temperature; for this reason, the temperature slope affects both the current dispersion and the kinds (component) dispersion within the system. A very accurate calculation of temperature distribution, component distribution, and flow characteristics is required to predict battery performance to improve battery design.

Therefore, the plurality of research in the literature has focused on the thermal govern of single cells or SOFC stacks as well as their performance. Many studies in the literature examine important parameters such as thermal attitude, fluid flow, and electrochemistry in solid oxide fuel cells. As SOFC technology is evolving, diverse SOFC models, SOFC types, and components at different scales are also available in the literature.

Razbani et al. researched the variation of the temperature profile on the surface of fuel cells with their experimental setup. In the study, the impacts of kiln temperature and current density on the temperature profile and cell performance were proven. Temperature profiles were made for 5A and 10A current values obtained at two dissimilar furnace temperatures at 900 ºC and 1000 ºC. While higher temperature gradients were obtained with increasing current density, it was observed that a more same temperature deploy was obtained with increasing furnace temperature [48].

Yan et al. improved an anode-supported, three-dimensional anode-supported planar SOFC. This set of cells is operated at 750 ºC with hydrogen oxidized by fuel and air under 3.36V open circuit voltage conditions, with a current density of 0.56W/cm^2 total power of 100W was obtained [49].

Blum et al. ın their research study in Forschungszentrum Jülich/Germany worked in the fields of battery manufacturing, batch projection, electrochemical and mechanical characterization performance and system design. Optimized anode-assisted batteries with two different cathode materials are standardized with a maximum power density of more than 4 A cm^{-2} with hydrogen/air at 800 °C and 0.7 V [50].

Liu et al. investigated the sinterability of electrolyte materials for intermediate temperature operation in order to prevent undesired reactions in solid oxide fuel cell components. In particular, they determined that the electrode polarization at loud current densities was remarkably suppressed when operated at 650 ºC [51].

Kim et al. conducted research on the performance and durability of solid oxide electrolysis batteries. In this research, the power density of the button cell is 0.48 W/cm^2 at 750 ºC and the flow rate of humidified hydrogen-air is 100 cc/min. They stated that the gas composition of the steam electrode should be optimized in the long term because of the tradeoff between the performance and durability based on the water concentration of the steam electrodes [52].

Lim et al. tested an anode-supported solid oxide fuel cell. It has been determined that the gas conversion excess potential may be important depending on the fuel usage and this additional excess potential is not interested in the electrochemical performance of the electrode [53].

Choudhury et al. also investigated the usability of loud temperature exhaust gases from SOFC in cycles such as Rankine, Brayton, for additional power creation and heating and cooling (co-generation/triple generation). They determined that the maximum efficiency achieved with SOFC-combined cycle systems is up to 90% dependent on the operating condition and configuration used [54].

Bi et al. Computational Fluid Dynamics (CFD) calculations were to actualize for the flow deployed in the SOFC. In the calculations, 3D models with geometric realistic, and working parameters were used. The effects of design parameters such as channel height and length, battery unit height, and manifold width, on flow integrity, were investigated. CFD results showed that manifold ratios are a design parameter that affects flow integrity [55].

Mauro et al. investigated the mass and energy transition in a planar SOFC with a three-dimensional finite element algorithm. The results allowed the availability of an effective and efficient model of fuel cell configurations of the geometry used. The

results obtained by modeling the real three-dimensional configuration of the fuel cell were compared with the two-dimensional results and showed a difference of 2% [56].

Wang et al. used a numerical simulation to calculate the performance parameters of the planar SOFC. For the simulation, they applied the finite volume method based on the fundamental conservation laws of mass, energy, momentum, and electric charge. The temperature of gaseous components, current density, and excess potential using a single battery unit model with dual channels in different flow states distributions and molar concentrations were calculated. They revealed the effects of operating conditions and anode structure on the performance of SOFC [57].

Qu et al. examined a three - dimensional model of an anode-supported planar SOFC. Mass, momentum, energy, and component conservation equations including electrochemical reactions and loud transfer because of convection conduction, and radiation are also included in the model. An experimental equation for battery resistance with measured valuations for dissimilar parameters is used for the computations. The temperature and gas concentrations and gas channels in the PEN (positive electrode/electrolyte/negative electrode) structure were investigated. They investigated the changes in the current density of the battery and the effect of radiation on the temperature distribution [58].

Fan et al. investigated SOFCs using different carbon-based fuels (natural gas, syngas, coal gas, etc.). In these studies, the effects of current density, temperature distribution, and thermal stress on SOFC performance were investigated. They presented detailed comparisons of gas concentrations and temperature change profiles between different simulation models. The results of this study revealed that COFP designed for methane can also work safely with syngas under the same operating condition [59].

Hawkes and O'Brien analyzed the CFD solution with ANSYS Fluent to determine the performance and operating characteristics of an Integrated Planar SOFC series. They determined performance values on a SOFC variety to reveal the associated variation in operating voltage, temperature distributions, and the like, and produced a polarization curve showing a linear Voltage-Current (V-I) intercourse [60].

Yakabe et al. developed a model handling the finite volume method to calculate the flow temperature and concentration in the SOFC. With the obtained temperature distributions, they calculated the stress distribution in the SOFC. They so explore the effects of SOFC size, operating voltage, and thermal conductivity of battery ingredients on cell performance [61].

CHAPTER 2

SOLID OXIDE FUEL CELL

Recently, solid oxide fuel cells (SOFC) have attracted great interest in an investigation and industrial areas for their different fuel options, high conversion efficiencies, high operating temperatures, and clean and quiet operation. A Solid Oxide Fuel Cell is a loud-temperature fuel cell made ceramic material containing an oxide ion-conducting solid electrolyte (change from 600 °C to 1000 °C). For this reason, it is more basic than other fuel cells and contains only two phases.

The biggest feature that makes SOFC attractive is its high starting temperatures (600 °C – 1000 °C). Along with high starting temperature, high reaction kinetics, and high efficiency, it also brings heat that can be used for cogeneration purposes. It also makes it possible to use hydrocarbons as fuel directly or after a minor reforming process. On the other hand, while carbon monoxide has a toxic effect in the polymer electrolyte fuel cell, it can be used as a fuel in SOFC [62].

Two electrodes surround an electrolyte, forming a cell. And it is essential that these electrodes are porous. Air enters through the cathode inlet and flows across the cathode. When an oxygen molecule arrives in touch with the electrolyte /cathode interface, it admits ions from the cathode. Oxygen ions widespread into the electrolyte and pass to the other side of the cell and interact with the positive electrode. Oxygen ions meet with the fuel at the electrolyte /anode interface, and produce form water, carbon dioxide, thermions and electrons. Electrons pass through external circuits to provide electrical energy.

Over low-temperature fuel cells, SOFCs have significant advantages, including:

- The reason why it is simpler in concept is that there are only 2 phases (gas, solid).
- skill to use fuels such as methane, higher hydrocarbons, methanol, ethanol, carbon monoxide, and biomass produced gas
- inner reform of the fuel

- efficient working integration with other components
- It does not require precious metal electrocatalysts

The disadvantages of SOFCs compared to fuel cells operating at low temperatures are as follows:

- Manufacturing difficulty and resistance due to its high temperature
- Carbon accumulation problem

2.1 Solid Oxide Fuel Cell Types

There are two main types of designs of SOFCs. These are tubular and planar designs. These designs are chosen according to their advantages and disadvantages during the production and usage stages.

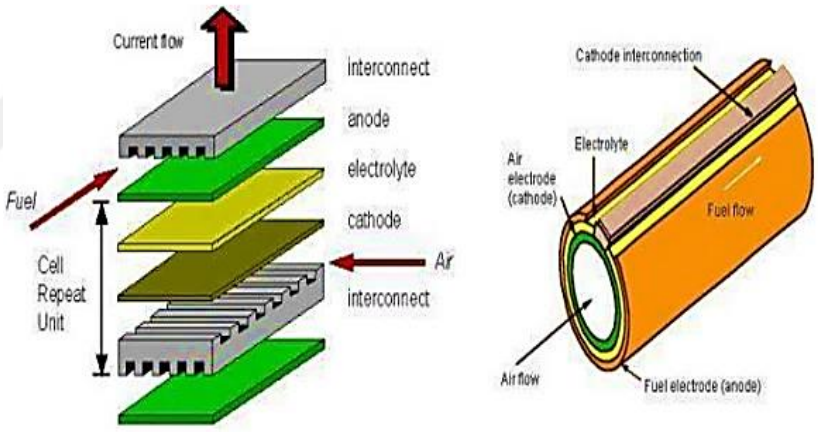

Figure 2.1 Flat-planar and tubular SOFC designs [63]

In the case of tubular constructions, it is unavoidable to conduct electricity at considerable distances in the plane of the electrolyte. With SOFC microtubular technology, the current is transmitted axially through the pipe. Interconnects are done at the end of the pipe using a variety of special connection systems that be tied cells in the stack. A metal (usually silver) current collector is applied to reduce the resistance on the cathode side [64].

SOFC is also gathered under three groups according to the membrane electrode group (MEA) as an electrolyte, electrode (anode and cathode), and metal-supported. Electrolyte-supported SOFC provides a more robust structure and thus is more resistant to breakage. Electrode-supported Solid oxide fuel cell is the more joint kinds of SOFC and is mostly produced with anode support, although there is a problem of fuel or oxygen reaching the reaction zone due to thick electrodes. In addition, the thinned electrolyte thickness makes it possible for the SOFC system to operate at lower temperatures and to display higher performance.

Electrolyte supported - the first planar cells were frequently electrolyte supported. This calls for a specially thick electrolyte. This leads to loud strength and the necessity of a loud-temperature process. Electrolyte-supported SOFC has a mechanically stronger structure and is more resistant to breakage. In general, electrodes with a thickness of approximately 100 – 300 μm and thicknesses of 30 – 120 μm are used, which is the thickest layer of electrolyte in electrolyte supported SOFC. High ohmic resistance and low polarization concentration at the electrodes is observed in such cells [65].

Cathode Supported - these supported cathodes allow for thinner electrolytes than electrolytic supported cells, but mass convection limitations and production difficulties make this approach worse than the supported one anodes.

Anode Supported - improvement in fabrication techniques have made it possible to fabricate anode-supported cells with thin electrolytes. Electrolyte thicknesses for this kind of cell are characteristic of about 3 and 15 μm. These kinds of cells both supply the possibility for very loud power intensity and show low ohmic resistance due to the thin electrolyte [66].

Metal interconnect supported – Lawrence National Laboratory, Argonne National Laboratory and Ceres pioneered metal – supported cells to minimize mass transfer resistance and the use of (expensive) ceramic materials. In such cells, the electrodes are typically 50 μm thick and the electrolyte is between about 5 and 15 μm. Despite the obvious utility, the challenge lies in finding combinations of materials and manufacturing processes that prevent corrosion and metal deformation and interfacial reactions during manufacturing and operation [67], [68].

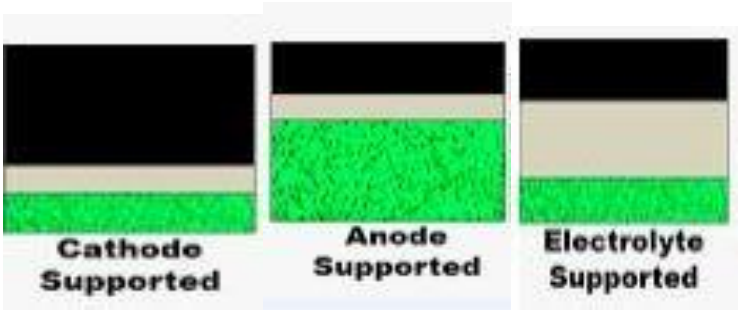

Figure 2.2 SOFC structure configurations (1) cathode supported (2) anode supported (3) electrolyte supported [69]

2.2 Solid Oxide Fuel Cell Working Principle

To understand how the reaction between hydrogen and oxygen produces an electric current and where the electrons come from, it is necessary to separately consider the electrochemical reactions taking placeat the anode and cathode.

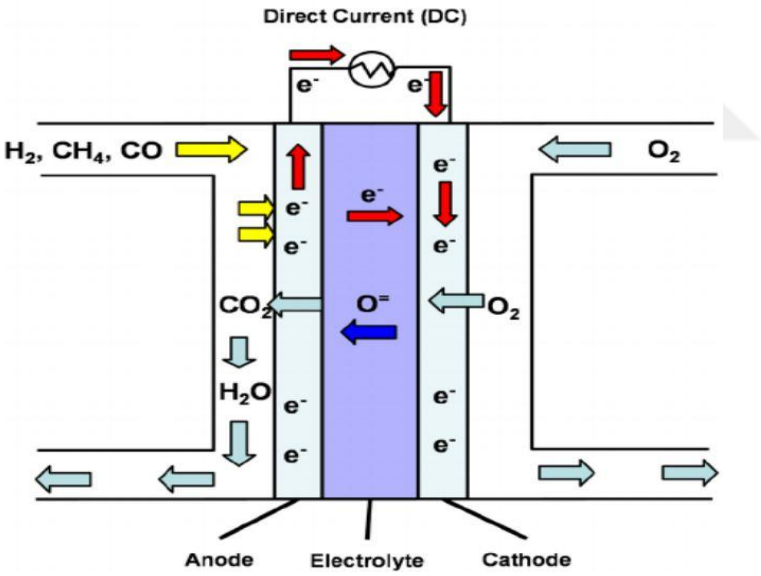

Figure 2.3 SOFC schematic of SOFC working principle [70]

SOFC cells consist of a membrane electrode group (MEA) where the reaction occurs and interconnectors containing gas flow channels. MEG consists of an cathode-anode electrode and electrolyte. The fuel feeds the anode part of the SOFC cell, the oxidizing cathode. The oxidation effect gets ground at the anode and electrons are left d in the open circuit. The cathode takes the electrons in the open circuit and the reduction

reaction takes place. Electrons travel from the anode to the cathode in an open circuit and produce direct current (DC) electricity. The anode, cathode, and total reactions for a hydrogen fuel-powered SOFC are given below.

Anode : $H_2 + O^{-2} \rightarrow H_2O + 2e^-$ **(2.1)**

Cathode : $½\ O_2 + 2e^- \rightarrow O^{-2}$ **(2.2)**

General : $H_2 + ½\ O_2 \rightarrow H_2O$ **(2.3)**

When studying the reaction, it can be seen that the electrons produced at the anode must be transported to the cathode area, and the oxygen ions formed at the cathode must be transported to the anode area. The transfer of electrons from the anode to the cathode takes place over the outer circuit, thanks to which an electric current is obtained, while the oxygen ions created in the cathode pass owing to the electrolyte and reach the anode area, creating water there [71], [72].

2.3 Open Circuit Potential

The electrical power get in solid oxide fuel cells even to the most high theoretical power that can be acquired in the electrochemical reaction time. Apart from the energy of the equation, this greatest theoretical study is even to the replace in molar Gibbs [73].

$$\Delta G = \Delta H - T \times \Delta S \quad \textbf{(2.4)}$$

Since this change in energy apart from the molar Gibbs is equal to the maximum electrical work,

$$W_{elec}^{max} = \Delta G = VxI \quad \textbf{(2.5)}$$

expressed as.

Considering equation (2.4), for 1 mole of hydrogen, 2 moles of electrons are leaved. The following equation calculates the current for the charge obtained by 1 electron

$$I = 2 \times N \times (-e) = -2Ne = -2F \quad \textbf{(2.6)}$$

For equation (2.4), the change in molar Gibbs free energy ΔG can be calculated as follows:

$$\Delta G = \Delta G^0 - R \times T \times ln\left\{\frac{P_{H_2} \times (P_{o_2})^{1/2}}{P_{H_2O}}\right\} \quad \textbf{(2.7)}$$

Substituting equations (2.5) and (2.6) in equation (2.4), we get the following equation:

$$\Delta G = V \times I \quad \textbf{(2.8)}$$

$$\Delta G^0 - R \times T \times ln\left\{\frac{P_{H_2} \times (P_{O_2})^{1/2}}{P_{H_2O}}\right\} = V \times (-2F) \quad \textbf{(2.9)}$$

$$V = -\frac{\Delta G^0}{2F} + \frac{R \times T}{2F} ln\left\{\frac{P_{H_2} \times (P_{O_2})^{1/2}}{P_{H_2\,O}}\right\} \quad \textbf{(2.10)}$$

The whole equation (2.10) is named the Nernst equation and gives the Nernst voltage V, and the first term to the alive is V0, common as the electromotive power or reversible/lossless open circuit voltage (OCV). That is, this is the maximum attainable voltage.

2.4 Polarization

Irreversibility is the reason why the fuel cell runs tensions down the Nernst potential. This irreversibility is widespread called polarization and is a task of draft density.

2.4.1 Ohmic polarization

Ohmic polarization losses are formed for electronic transmission of the draft owing to interconnections and electrodes and due to ionic transmission of oxygen ions owing to the rigid electrolyte. Therefore, the conductance of necessaries plays a most major role in ohmic lose. The voltage decrease depending on the ohmic lose can be readily calculated as follows:

$$\Delta V_{ohm} = IxR \quad \textbf{(2.11)}$$

2.4.2 Activation polarization

Activation polarization is the energy gone when electrochemical reactions at the cathode and anode slow down. Simultaneously, the deceleration time can become seen as the additional energy demanded to accomplish the created energy limit. We can calculate the polarization as follows:

$$\Delta V_{act} = \frac{RxT}{nxaxF} ln\left(\frac{i}{i_{exc}}\right) \quad \textbf{(2.12)}$$

Equation (VI) is similar for cathode and anode polarization.

$$\Delta V_{act} = \frac{RxT}{2xa_axF} ln\left(\frac{i}{i^a_{exc}}\right) + \frac{RxT}{2xa_cxF} ln\left(\frac{i}{i^c_{exc}}\right) \quad \textbf{(2.13)}$$

gives the total activation polarization, where i^a_{exc} and i^c_{exc} are the current intensity exchanged for the cathode and anode, in order of, and α_c and α_a are charge transfer coefficients for cathode and anode, respectively. These parameters depend on the material used and the electrochemical reactions. Generally, in these cases, the polarization at the anode can be ignored in fuel cells using hydrogen as a fuel. For higher temperatures, this is not so important. This is for the increment in electrochemical reaction kinetics [73].

2.4.3 Concentration polarization

Concentration loses occurs because the partial pressure in hydrogen and oxygen decreases. When the fractional pressure decreases, the battery voltage drops. This reduction in partial pressure is for the consumption of oxygen and hydrogen in the way of the gas flux conduits. Depending on the concentration polarization, all potential loss can be written as:

$$\Delta V_{con} = -\frac{RxT}{nxF}\left[\frac{1}{2} ln\left(1 - \frac{i}{i^c_{lim}}\right) + ln\left(1 - \frac{i}{i^a_{lim}}\right) - ln\left(1 + \frac{P_{H_2}}{P_{H_2O}xi^a_{lim}}\right)\right] \quad \textbf{(2.14)}$$

i^a_{lim} and i^c_{lim} are limited current densities for cathode and anode, respectively.

2.4.4 Actual Cell Voltage

To find the genuine cell voltage, it may be established by finding the total polarization and removing this sum total loses from the Nernst tension. The real cell voltage is found by the expression below.

$$V_{cell} = V - \Delta V_{ohm} - \Delta V_{act} - \Delta V_{cone} \quad \textbf{(2.15)}$$

2.4.5 Cell efficiency

For SOFC, the maximal enthalpy change that can be transform electricity is ΔH. If this were the change, then the theoretical voltage would have to be:

$$V_{teor} = \frac{\Delta G}{2F} \quad \textbf{(2.16)}$$

So cell efficiency can be written as:

$$\eta_{cell} = \frac{V_{cell}}{V_{teor}} \quad \textbf{(2.17)}$$

However, the solid oxide fuel cell does not use all of the fuel when operating. Therefore, the fuel usage factor μ fuel ; fuel supplied to and consumed in the fuel cell. SOFC yield based on μ fuel can be written as:

$$\eta_{cell} = \mu_{fuel} \frac{V_{cell}}{V_{teor}} \quad \textbf{(2.18)}$$

2.5 Solid Oxide Fuel Cell Components

Electrolyte, cathode, anode, junction and bipolar plate are important components of one SOFC cell. The fuel cell stacks include an electrical connection that connects the separate cells in series or in parallel. The electrolyte is made of ceramics like yttrium balanced zirconium oxide and acts as a conductor for the oxide ions. The oxygen atoms are decreased by electrons to oxide ions on the permeable cathode surface and then flow from the ceramic electrolyte to the rich in fuel permeable anode, where the oxide ions react with the fuel and release electrons.

2.5.1 Anode

While a wide variety of materials are considered to be the anode materials for SOFC, many researchers use nowadays much variety of YSZ and Nickel. Previously, pure passage metals such as nickel and iron were used in the improving of SOFC, along with valuable metals such as platinum and gold. Due to the physically and chemically unstable nature of these materials, other materials such as nickel aluminide have been proven. Nickel (Ni) is used as the basic anode material in both high-temperature SOFC and medium temperature SOFC [74].

In 1970, Spacil realized that the combination of nickel particles and as an anode, YSZ is both steady and real. The compound of the anode, the spall size of the powder, and the producing method are the keys to successful loud electrical conductance, sufficient ionic conductivity, and high activity for electrochemical as well as strain and reaction reactions. Reducing NiO to Ni powder in the anode blend produces the desired porosity. For newer cells with an anode, it withal provides well mechanical properties and maintains geometric stability pending production and use. For example, a compound of rude YSZ powder and fine YSZ powder can be used to achieve mechanical strength while maintaining the wanted communication among the Ni and YSZ phases. Some advanced cell styles use a graduated anode to reach roughly permeable and loud mechanical force in most of the anode and fine microporosity in the anode region now adjoining to the electrolyte. Considering the national achievement of the Ni-YSZ anode, it also has its downsides.

Ni is easily reoxidized when the anode comes into contact with air at high temperatures. Due to the great volume change pending anode reduction/oxidation, the strength and structure of the anode are severely affected. Indeed, anodes should always be kept in reduction conditions. The coefficient of thermal expansion of the anode is considerably higher than that of the electrolyte and cathode. In anode structures, this can cause problems with dimensional and mechanical constancy, particularly pending thermal cycling.

Weak performance against direct oxidation of hydrocarbons and a tendency to form carbon on contact with hydrocarbons. Copper-ceria anodes are assets advanced to

improve the direct oxidation activity and reduce the carbon formation tendency of the anode [75].

2.5.2 Cathode

Lanthanum-based perovskite (ABO_3) materials is commonly used cathode catalysis in SOFC, nowadays. Before the developments some precious metals was tried to use for cathode material , such as platinum, palladium magnetite. This type of catalyst material was abandoned because of its chemical and physical instability and cost. The chosen of the material depends several consedirations.

- When evaluated in terms of ionic conductivity, the value of YSZ is higher than LSM.
- Controlled interaction with ceramic interconnects (especially lanthanum chromite). While some mutual diffusion may occur, this is not a serious problem.
- Thermal expansion coefficients close to YSZ [76].

2.5.3 Electrolyte

The most important system element that define the yield and life of the SOFC system is the electrolyte. The role of the SOFC electrolyte in the system is to transfer the oxygen ions formed at the cathode to the anode. Therefore, the electrolyte must have high oxygen ion conductivity in SOFC operation. Other properties that the SOFC electrolyte should have can be listed as follows:

- Gas tightness
- Non-porous structure
- Electronic insulation
- Chemical steady and chemical relevance with other system elements
- Resistance to sudden temperature changes

As the name suggests, SOFCs usage oxide ceramics, usually perovskites, as electrolytes. In the 1890s, Nernst achieved that specific perovskite, stabilized zircons, formed ions within a specific temperature span. In 1943, Baur and Preuss indicated

that these electrolytes could be used as ion conductors in (oxygen). The veriest generally used electrolyte in SOFCs is yttrium stabilized zirconium oxide (%3.8 or %10 Yttrium, YSZ for short). Zirconium dioxide is very stable in decreasing and oxidizing environments at the anode and cathode of the fuel cell, respectively. This is the case with the zirconium dioxide fluorite crystal structure, where some of the Zr^{4+} ions are replaced by Y^{3+} ions in order to conduct O_2 ions. When this ion exchange occurs, the row of oxide ions remains empty as the three O^{-3} ions replace the four O^{-4} ions. Oxidation transfer occurs between the cavities in the tetrahedral regions of the perovskite lattice

YSZ provides high conductivity at temperatures above 700°C and shows negligible electronic conductivity at these temperatures. In a fuel cell operating with a current density of a 250 mA/cm^2 at 1000°C and an electrolyte with a thicknees of 200 μm, the resistance loss in the electrolyte will be 50 mV. However, for mechanical reasons, it is desirable to operate the SOFC at lower temperatures.

In the literature, besides YSZ – as an electrolyte material, relatively lower (ScSZr) materials are used. Recently, ScSZr has come to the forefront by offering better electrical conductivity and chemical stability at lower temperatures than YSZ [77].

2.5.4 Interconnector

Candidate SOFC materials shall have the following properties.

- Thermodynamic uniformity from room temperature to operating temperature
- Stability at oxidizing and reducing operating temperatures
- High electronic conductivity
- Low ionic conductivity and low permeability of gaseous materials

Interconnects are one of the main components of SOFCs. Today, many studies are being carried out to advance the performance of SOFCs, one of which is interconnection designs. The 2 most important factors should be considered when designing interconnects. First, it is beneficial because gas transfer is carried out by

interconnections and reduces concentration losses. The other is to shorten the flow path and reduce the ohmic losses [78].

In general, the binding materials for SOFC are divided into 2 classification; Permeable ceramic materials (perovskite) for high-temperature operation (900 ° C to 1000 ° C) and metallic alloys for low-temperature operation. While the shape of the SOFC junctions is highly dependent on the cell and cell design, the choice of material is determined almost exclusively by chemical and physical stability under operating conditions. High-temperature SOFCs mainly use ceramic compounds, mostly composed of doped yttrium and lanthanum chromites (additives typically Mg, Ca, Sr, Ca/CO). The perovskites used have high electronic conductivity and high resistance to degradation when exposed to syngas. These materials are not suitable for use at low temperatures as the temperature is directly proportional to the electronic conductivity. The electrical conductivity of these materials at 1000 ° C varies from 12 to 9 kJ / mol, activation energy, and from 1 to 30 S / cm, depending on the level of the additive. The degree of contamination also controls the thermodynamic properties and compatibility of the electrolyte or electrode material. The lanthanum chromite interblock compounds demonstrated cell stability up to 69,000 hours. However, one of the problems with ceramic interconnects is that they are as hard and brittle as ceramic components. Its components do not provide pressure. Some designs have ceramic interconnects. And these interconnect use a contact seal and conductive paste [79].

2.5.5 Sealant

The requirements that sealants must meet are to supply hermetic sealants to be chemically compatible with other battery components and to ensure that no fuel or oxidant gas leaks after prolonged thermal cycling. Sealing approaches for SOFC can be classified as rigid sealants and compressive sealants. The most common sealants for SOFC are; They are glass and glass ceramic materials belonging to rigid sealants. The two most important characteristics important for the selection of a suitable glass or glass ceramic sealant are CTE and glass transition temperature (T_t). This can be adjusted in particular by adding different amounts of glass. T_t is defined for a viscosity of 10 poison. When the operating temperature is higher than T_t, glasses and glass-ceramics become viscous. The high temperature viscous property is important because

glasses and glass ceramics must flow adequately to determine suitable sealants and to maintain adequate structural integrity under operation. Some suitable glass and glass ceramic sealants have been developed for SOFC application, such as the BaO-Al2O3-B2O3-SiO2 system and the SrO-La2O3-Al2O3-B2O3-SiO2 system with the addition of La2O3, ZrO3 or NiO. In addition to glass and glass ceramic sealants, mica-based materials are an alternative choice to SOFC sealants. Mica-based materials belong to compressive sealants. A big advantage of compressive sealants is that sealants are not fixed to other SOFC components. However, an applied load is required to prevent gas leakage.

2.5.6 Bipolar plates

The bipolar plates of fuel cells carry hydrogen and other reaction partners, which react in the fuel cell with the help of gas channels. Its main task is to supply the reaction gases to the gas diffusion electrodes using the surface flow field. Furthermore, Bipolar plates should also provide an electrical connection between cells and remove water from the product. Fully functional bipolar plates are used in multi-cell configurations to electrically connect the anode of one cell in series with the cathode of the neighboring cell. To meet these requirements, the basic materials of bipolar plates need specific properties. Graphite, carbon compounds, or stainless steel are commonly used in SOFCs. Each of these materials is of critical importance to SOFCs. However, they can show features that are limited by other components. An excellent bipolar plate should have loud electrical conductivity and corrosion guard, low density but high mechanical strength, be tight to reactive gases, chemically inert, and incorporate the properties of these materials for ease of manufacture [80].

Among the performance parameters of fuel cells, the design of gas flow channels is of great importance.

In this case, bipolar plates are one of the most important components of fuel cells and they are required to work simultaneously with other cell components for better battery performance. Bipolar plates join and separate two adjacent cells. Bipolar current collector plates have many functions in battery cell arrays.

Features of bipolar current collectors/splitters:

- They should be sufficiently strong and light
- They electrically connect the cells in series
- They must conduct electricity.
- They separate gases in neighboring cells
- They must be gastight
- They provide structural support to the pile
- They transmit the heat from the active cells to the cooler cells or channels
- They must have thermal conductivity

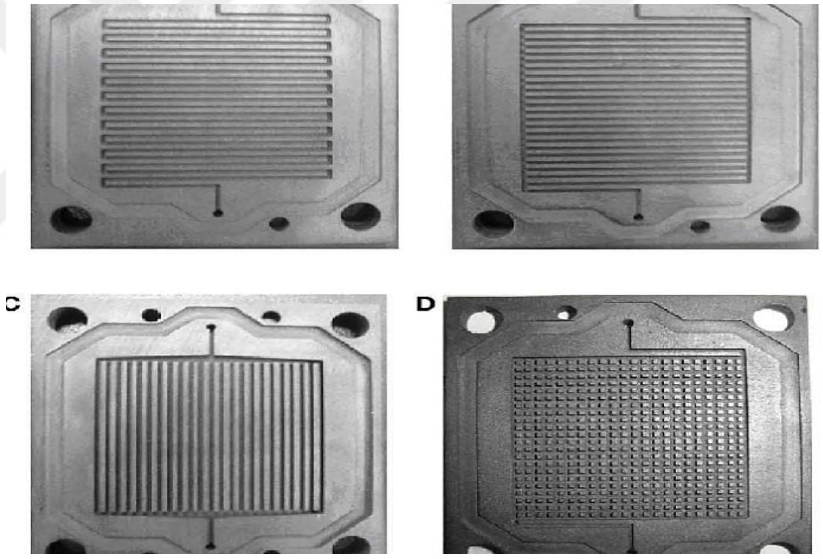

Figure 2.4 Gas flow channels [81]

2.6 Classification of Solid Oxide Fuel Cells

SOFCs can be classified as follows.

- classification of temperature
- cell and stack design
- classification by support types
- classification by flow configuration

- classification by fuel reform types

2.6.1 Classification of Temperature

SOFCs can be divided into three categories in accordance with their process temperature.

- High Temperature (HTSOFC)
- Intermediate Temperature (ITSOFC)
- Low Temperature (LTSOFC)

In SOFCs operating at high temperatures, increasing the temperature decreases the resistance of the cell components and increases the kinetics of the electrode. This causes an increase in cell efficiency. A higher SOFC outlet temperature is required for better thermal integration and better thermal performance with other technologies. Moreover, higher operating temperatures will some problems such as higher corrosion rates deterioration of structural integrity, higher material costs, or longer start-up and stop times [82].

2.6.2 Classification by Cell and Stack Designs

By design, SOFC cells and stacks can be divided into planar , tubular, and serial. Among these types of structures, the most common are flat and tubular. Flat shaped designs are more compact than tubular designs because there are no large gaps between cells. In additionaly, the bipolar plates used in the planar design provide a simpler layout of electrical connections and shorter current paths between the cells. The price of producing planar SOFCs is not high. Nevertheless, in a flat design, a gas-tight gasket is required. In the tubular structure, cells can expand and contract without any restriction. According to SOFC, this structure is a cross between tubular and planar geometry, having the precedence of freedom of thermal dilatation such as pipe, and cost-effective manufacturing of components such as flat. [83].

2.6.3 Classification By Support Types

If we separate the SOFCs according to the support types, we can distinguish them as cathode, anode, and electrolyte supported. The electrolyte coated type may be suitable for an HTSOFC because as the temperature of the SOFC increases, the ionic resistance of its electrolyte decreases. In the case of ITSOFC and LTSOFC, the electrolyte is usually produced in a very fine form and the fuel cell is supported by an anode or cathode. All three types of production are also known as self-supporting productions. SOFCs may also have external support that includes porous and connecting support.

2.6.4 Classification by Flow Configuration

We can find 3 types of flows in SOFCs. These are parallel flow, cross flow, and counterflow. The flow configuration choosen affects the temperature distribution in the cell. Recknagel et al. showed that the co-flow configuration has the most uniform temperature distribution and the smallest temperature gradients with similar fuel consumption and average cell temperature.

2.6.5 Classification by Fuel Reform Types

Fuel (eg methane and syngas) entering the SOFC is converted electrochemically to H_2 or CO, is oxidized to SOFC. This reform process can be outside the external reform or inside the internal reform. There are two possible kinds of internal reform, namely Indirect Internal Reform (IIRSOFC) and Direct Internal Reform (DIRSOFC). In IIR-SOFC, the reforming section is separate from the other elements of the cell but is in thermal contact with the anode segment. In DIR-SOFC, on the other hand, the reform takes place directly on the anode catalyst. IIR-SOFC effectively eliminates the problem of carbon build-up. However, in IIRSOFC, cells closer to the reforming section will be cooler owing to its endothermic reaction, which makes it difficult to maintain an even temperature distribution in the stack [84].

2.7 The Effects of Channel Section Geometry on Stack Performance

In fuel cells, it is known that the channel section geometry has a great effect on battery performance. In the literature, the cross-sectional areas of PEM fuel cells have been

investigated. Changes in operating parameters, channel dimensions, and channel section geometries also change the temperature, pressure, current density, velocity, and concentration deploys in the fuel cell. The most works in the literature are quadrilateral, triangular, trapezoidal, and half-ellipse geometries [85].

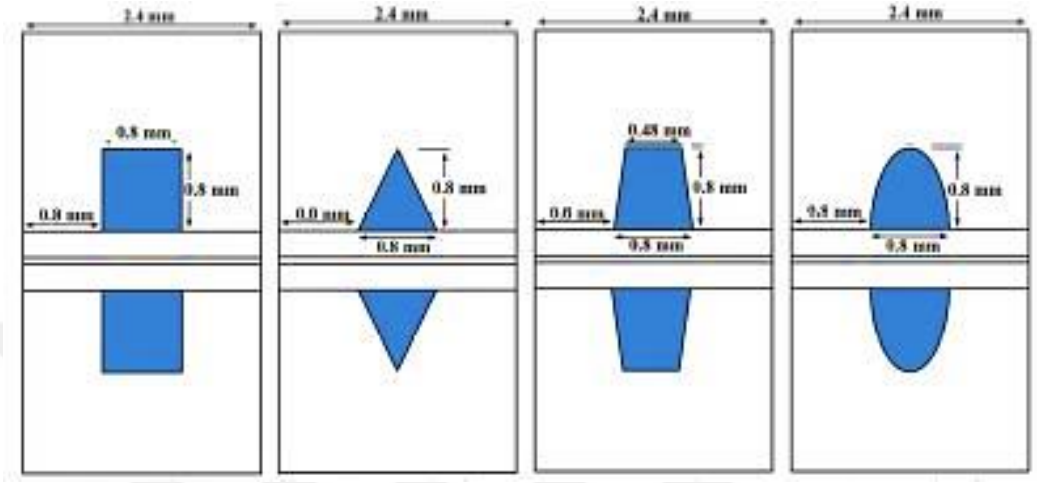

Figure 2.5 Channel section geometries in SOFC [86]

With the changing channel section geometries, one or more of the geometric parameters such as channel cross section area size, channel width, channel height, and the active surface area size of the cell change.

As a result of the investigations, it is seen that the battery potential decreases with increasing current density for all cases. Reducing the channel height increased the diffusion of the reaction gas in the diffusion sheet and caused a more homogeneous concentration dispersion, thereby development fuel cell performance. The amount of power obtained increases with the increase of the current amount up to a certain value in all channel geometries, reaches the maximum amount, and then decreases due to concentration losses. As the channel width increased, the current densities at which maximum power was obtained also increased. The amount of power obtained decreased with the increase of channel height.

CHAPTER 3

METHODOLOGY AND METHOD

3.1 Conservation of Momentum equation

In SOFC, the fuel is considered laminar because it has both low velocity and low factor. Thus, the momentum equation can be impact as:

$$\frac{\partial(\rho.\vec{u})}{\partial t} + \overrightarrow{u}.\nabla(\rho.\vec{u}) = -\nabla P + \nabla(\mu.\nabla\vec{u}) + S_M \quad \textbf{(3.1)}$$

Here P is the pressure (Pa), μ is the fluid viscosity (Pa.s) and S_M is the external forces per unit volume (N/m3). This external force is different for each layer of the fuel cell [87].

3.2 Conservation of Mass equation

The mass conservation equation of continuity equation for anode, cathode, and gas channels is as follows.

$$\frac{\partial\rho}{\partial t} + \nabla.(\rho\vartheta) = S_M \quad \textbf{(3.2)}$$

In the equation; ρ is the density, ϑ is the velocity vector and S_M is the source term.

3.3 Conservation of Energy Equation

The energy conservation equation describing the variation and distribution of temperature in a fuel cell is defined as follows.

$$C_p\frac{\partial(\rho.T)}{\partial t} + C_p.\overrightarrow{u}.\nabla(\rho.T) = \nabla(\alpha.\nabla T) + S_T \quad \textbf{(3.3)}$$

Here, Cp is the thermal capacity (J/(kg. K)), T is the temperature (K), λ is the thermal conductivity (W/(m. K)), and S_T is the volumetric energy source (W/m3) [88].

3.4 Thermal Behaviors of the SOFC Model

Solid oxide fuel cells actuate at loud temperatures compared to another sorts of fuel cells. This brings both benefits and challenges. One of the benefits is increased overall unit efficiency. The temperature of the fuel and air sources can be increased while the reaction off-gases can be directed through the heat exchanger. It allows the battery to operate in a regime where it has loud ionic and electronic conductance.

The disadvantage united with the loud operating temperature is the long operating times of the battery. Uneven thermal dilation of the layered components of the battery can also result in layer separation or cracking.

Radiation plays an active role in high-temperature heat exchange. In fuel cells, as in engineering models of many low-temperature systems, radiation is not ignored. Although radiation is more effective at high temperatures, it can also be effective in heat transfer by convection and conduction.

The importance of thermal modeling in fuel cells is also well known. The thermal characteristics of an SOFC influence the reaction kinetics, electrochemical behavior, battery cooling, and overall efficiency of a unit when combined with the heat recovery cycle. In addition, oxygen ion transport through the electrolyte occurs only above certain temperatures, and therefore the local temperature of the fuel cell components directly impacts the performance.

3.5 Boundary conditions and Acceptances

There are two important points in modeling studies: boundary conditions and acceptances. It should be emphasized here that no modeling study can fully provide real material properties. This is because the materials used in a system or structure can never be produced completely pure or homogeneous. Although it is possible to model inhomogeneous structures, even this approach contains homogeneous structures within itself. Therefore, they are partially homogeneous. In this study, instead of this approach, it is assumed that each element in the system is homogeneous and ideal materials in itself. Since fuel cells are systems consisting of porous elements, this

homogeneity should be considered at the macro level. When viewed at the macro level, the pore diameters and the distribution of the pores (pore density) are constant. Other general acceptances are given below:

- flow is laminar
- Hydrogen used as fuel and air used as oxidizers were accepted as ideal gas.
- Properties such as permeability, porosity, and conductivity of the electrodes and channels are considered homogeneous.
- The model is single-phase, the species is in the gas phase and the presence of liquid is neglected.
- The system works continuously.
- A three-dimensional examination was made.
- Moisten hydrogen and humidified air are provide from the inlets of the flow channels.
- Since current collector plates and bipolar plates are not used, ohmic losses occurring here are neglected.
- The membrane is impervious to hydrogen, nitrogen and oxygen. Only water and protons are transported owing to the membrane.

CHAPTER 4

RESULTS AND DISCUSSIONS

4.1 Model Description

In this section, 4 different geometries of SOFC stacks are designed and pressure drop is examined. Stacks are 30-cell and 40-cell, with 2 fuel inlets and 2 fuel outlets. The goal of this research is to examine the impact of varied design geometries on pressure drop. The designs made are given in 4.1, 4.2, 4.3, 4.4.

The study was first designed in 3D in the Solidworks software, and then these designs were analyzed with the Comsol Multiphysics software. The flow rate used to find the pressure drop in the analysis was kept constant with the reference flow rate in the study of “Parametric study of kW-class solid oxide fuel cell stacks fueled by hydrogen and methane with fully multi-physical coupling model” by Li et al [89].

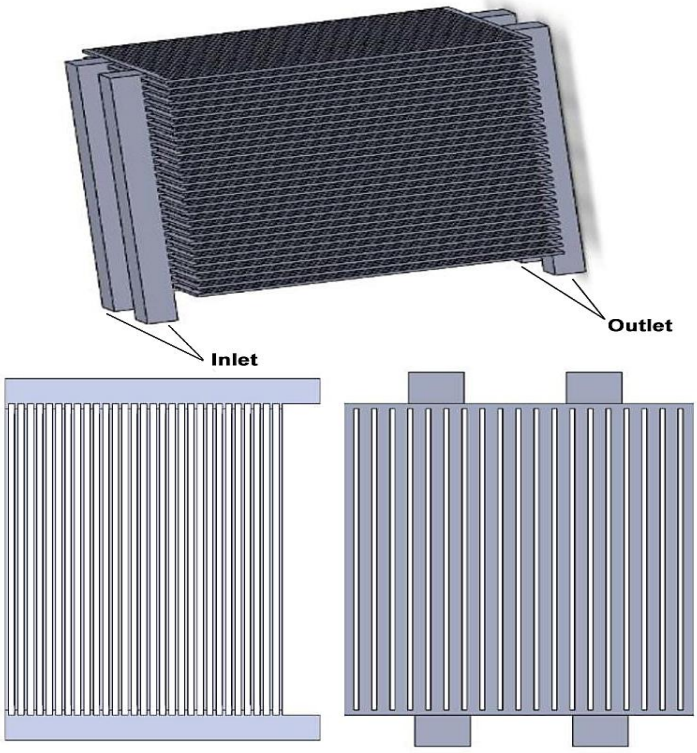

Figure 4.1 Stack 1 geometry design

The design of Stack 1 is given in Figure 4.1. Stack 1 contains four parallel manifolds for oxidant and reactant feeding. Manifold dimensions are the same. Each manifold has dimensions of 100x17x10 mm. The stack consists of 30 cells. The flow field is designed as a parallel flow. The dimensions of the channels are 116x4x1.5 mm. Stack 1 was also drawn in accordance with the article referenced in this study.

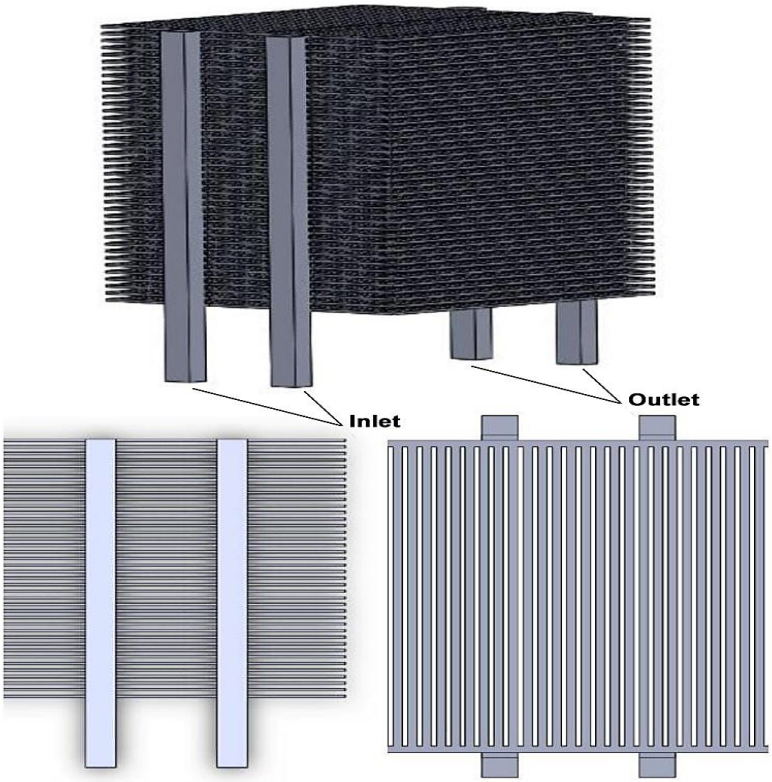

Figure 4.2 Stack 2 geometry design

The design of stack 2 is given in Figure 4.2. Stack 2 consists of 2 inputs, 2 outputs, and 4 manifolds. Each manifold has dimensions of 150x10x10 mm. The stack consists of 40 cells and has an active area of 120 mm2. The flow field is designed in parallel. Channel dimensions are 116x2.5x1.5mm. The pressure drop was monitored by changing the dimensions of heap 2 to the reference pile dimensions.

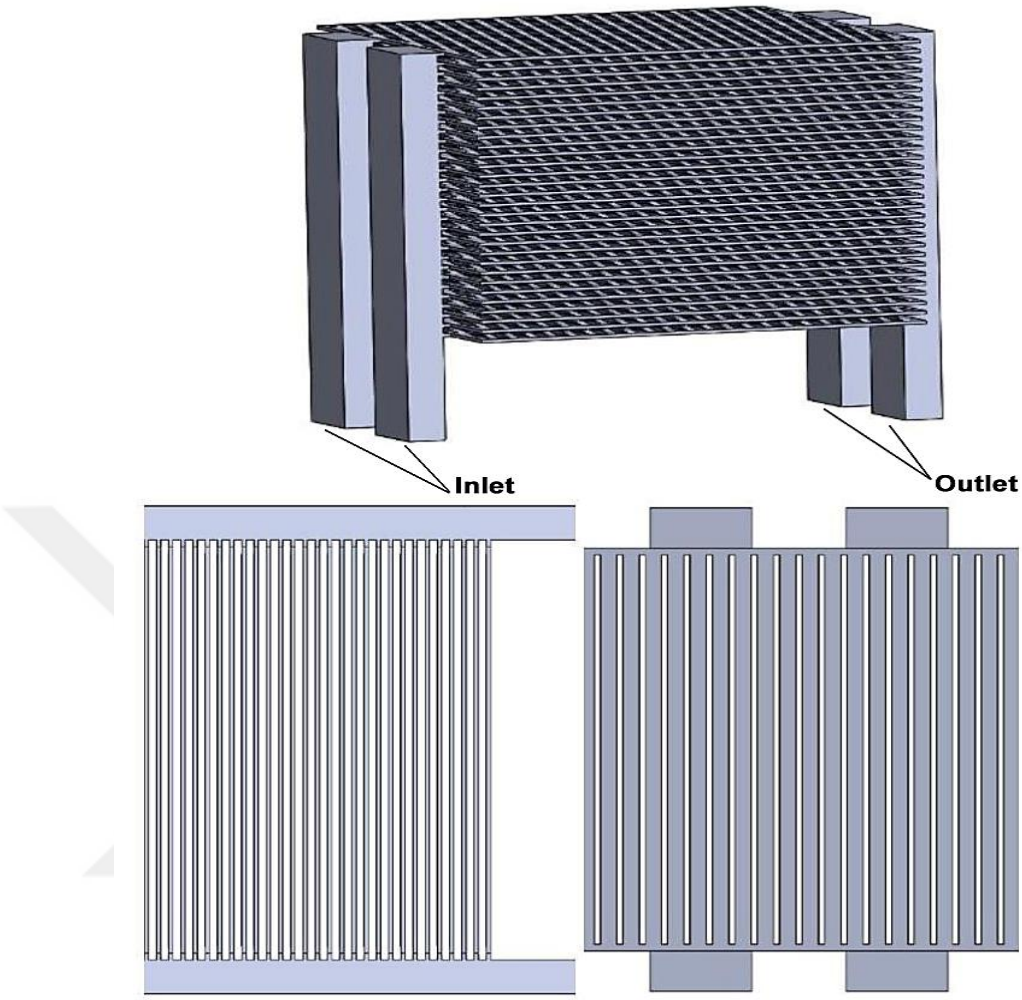

Figure 4.3 Stack 3 geometry design

The design of stack 3 is given in Figure 4.3. As in other designs, the 3rd design consists of 4 manifolds and 30 cells. The dimensions of the manifolds are 120x25x10 mm. The flow channels are parallel and the channel dimensions are 116x4x1.5mm. In this design, the pressure drop is monitored by enlarging the manifold size

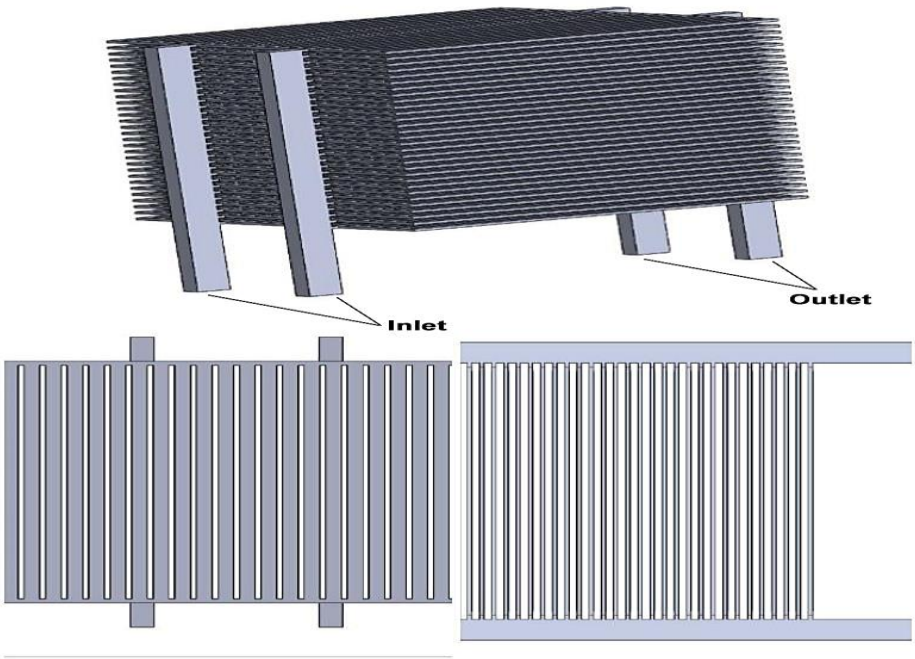

Figure 4.4 Stack 4 geometry design

The stack 4 design is shown in Figure 4.4. This design consists of 4 manifolds with dimensions of 100x6x10 mm. The flow channels are parallel and measure 116x2.5x1.5 mm. In this design, the pressure drop in a narrower manifold is observed as seen in the dimensions.

It is known that geometry design in fuel cells affects many variables of cell performance. In the study, we examined the manifold dimensions of a fuel cell stack and how the flow channel dimensions affect on the pressure. The manifold dimensions of the designed stacks are given in Table 4.1.

Table 4.1 Channel and manifold dimensions of different designs

	Number of cells (N)	Active area (mm^2)	Manifold: length/width/height (mm)	Channel dimension (mm)
Stack 1	30	120 x 120	100 x 17 x 10	116 x 4 x 1.5
Stack 2	40	120 x 120	150 x 10x 10	116 x 2.5 x 1.5
Stack 3	30	120 x 120	120 x 25 x 10	116 x 4 x 1.5
Stack 4	30	120 x 120	100 x 6 x 10	116x 2.5 x 1.5

4.2 Model Validation

To calculate the pressure drop in SOFC, M.Guo et al used the article 'Parametric study of kW-class solid oxide fuel cell stacks fueled by hydrogen and methane with fully multi-physical coupling model'. While creating the model, the parameters used by Guo et al. in their experiment were taken into account. The batch sizes they tested were respected. Stack 1 represents the stack used in this experimental study. Pressure drop values given by Guo et al. were used to verify the modeling study. These values show the pressure drop of the heap without reaction. The pressure drop values obtained as a result of the modeling study and the values obtained by Guo et al. were transferred to excel. These 2 data sets were normalized and compared. This comparison is given in figure 4.2. As can be seen from Figure 4.2, the results from the reference article and the modeling results have the same appearance. This shows that the model made is correct. The reason why the graphs do not overlap completely is that the normalization parameters used in the reference article and the normalization parameters used in this article are different.

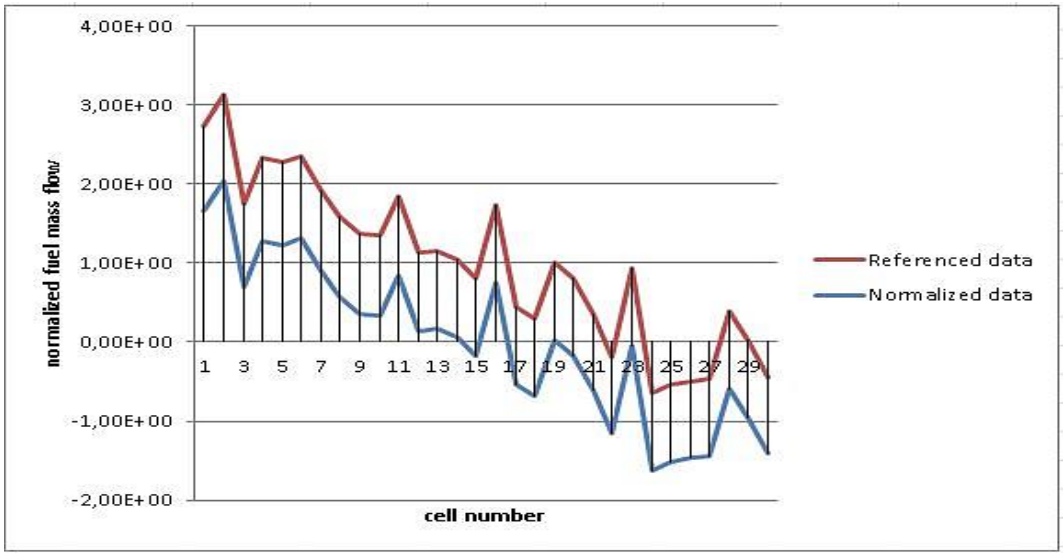

Figure 4.5 Comparison of results of reference and normalized data

After the validation study, 3 different stack designs were made, provided that the geometry of the flow area was constant. While designing this stack, it is aimed to examine the effects of pressure drop by changing manifold width, channel width, flow rate, and cell number. The parameters of the designs made are given in Table 4.2.

Table 4.2 Stack geometry parameters

Parameters	Stack 1	Stack 2	Stack 3	Stack 4
Channel width (mm)	4	2.5	4	2.5
Monifold width (mm)	17	10	25	6
Debi (m^3 / s)	4×10^{-4}	5.33×10^{-4}	4×10^{-4}	4×10^{-4}
Velocity (m/s)	2.35×10^{-1}	3.55×10^{-1}	1.34×10^{-1}	0.67
Area (m^2)	1.7×10^{-3}	1.5×10^{-3}	3×10^{-3}	6×10^{-4}

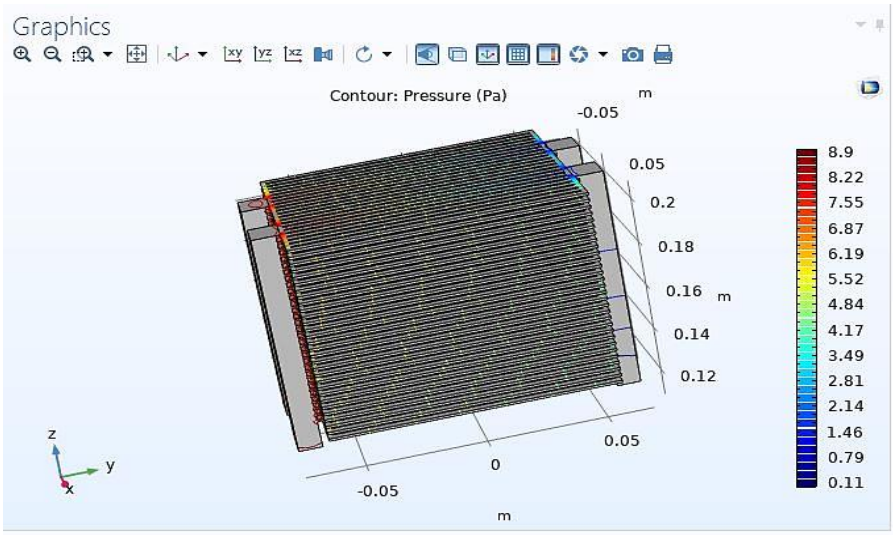

Figure 4.6 Pressure distribution of the Stack 1 design.

Stack 1 design with a manifold width of 17 mm and a channel width of 4 mm is given in figure 4.3 when H_2 is fed with a flow rate of $4x10^{-4}$ m^3/sec.

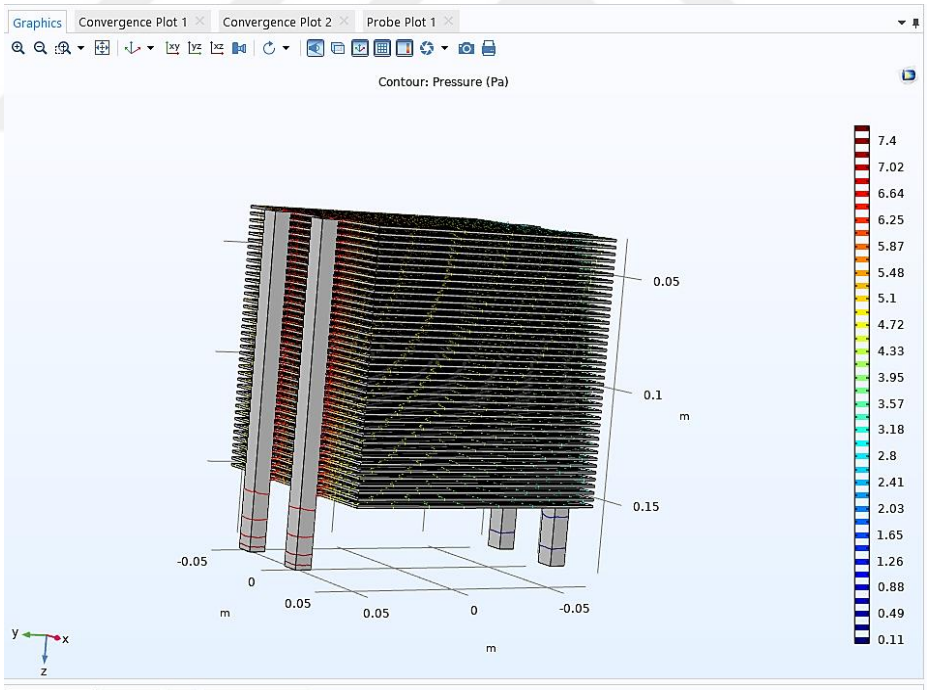

Figure 4.7 Pressure distribution of the Stack 2 design

Stack 2 design with a manifold width of 10 mm and a channel width of 2.5 mm is given in figure 4.4 when H_2 is fed with a flow rate of $5.33x10^{-4}$ m^3/sec.

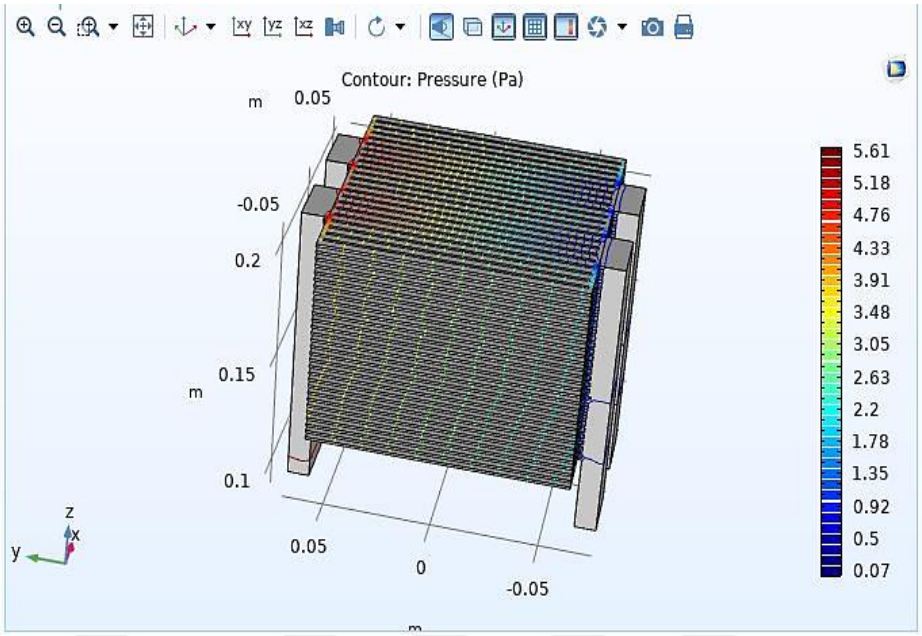

Figure 4.8 Pressure distribution of the Stack 3 design.

Stack 3 design with a manifold width of 25 mm and a channel width of 4 mm is given in figure 4.5 when H_2 is fed with a flow rate of $4x10^{-4}$ m^3/sec.

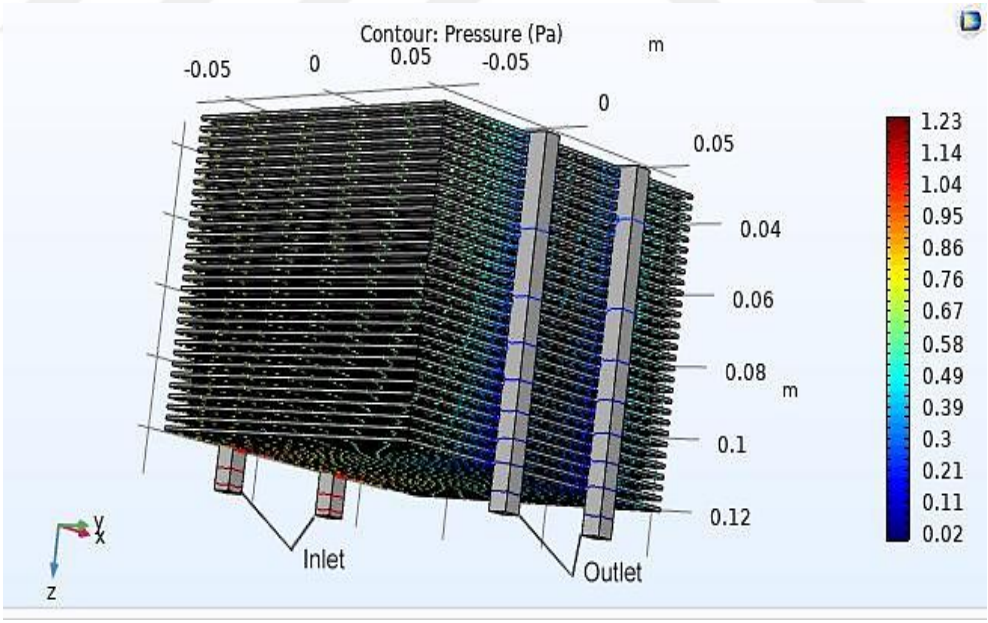

Figure 4.9 Pressure distribution of the Stack 4 design.

Stack 4 design with a manifold width of 6 mm and a channel width of 2.5 mm is given in figure 4.6 when H_2 is fed with a flow rate of $4x10^{-4}$ m^3/sec.

The pressure drops of the modeled piles are given in table 4.3. However, the effect of the manifold geometry on the pressure drop is given by the line graph in figure 4.6.

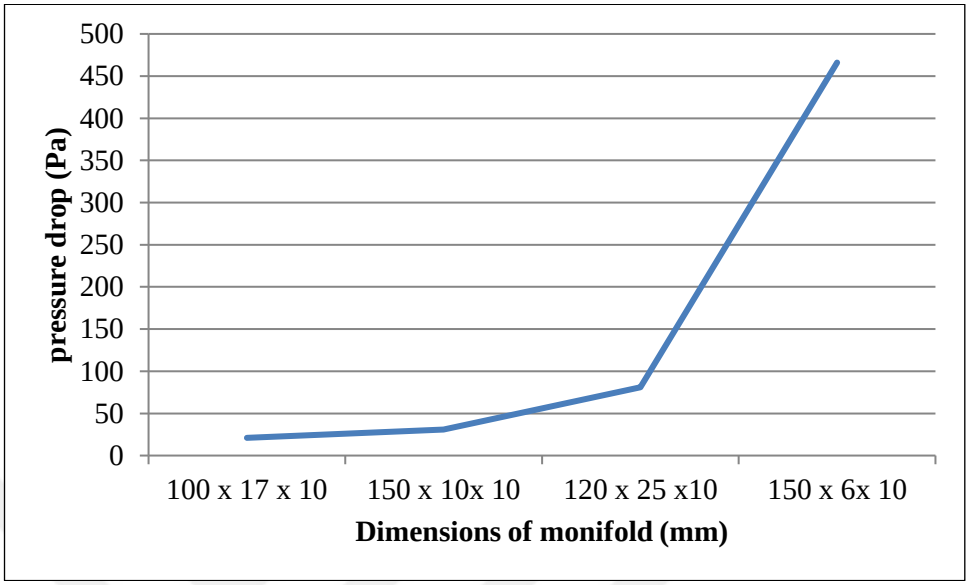

Figure 4.10 Pressure drop according to monifold geometry

Table 4.3 Pressure drop values

Stack 1 (100x17x10)	21 (Pa)
Stack 2 (150x10x10)	31 (Pa)
Stack 3(120x25x10)	81(Pa)
Stack 4(100x6x10)	466 (Pa)

CHAPTER 5

CONCLUSION AND RECOMENDATION

In this study, fuel cells, one of the promising technologies, were studied. Today, the most advanced results in research and production have been achieved in fuel cells.

In this study, manifold channels with different geometries were created for Solid Oxide Fuel Cells and the pressure drop was calculated by giving fuel to the created manifolds at a constant flow rate. At the same time, considering that the widths of the parallel flow channels were changed, the results were as follows.

- In parallel flow channels, the inter-channel distance was kept constant and the pressure drop decreased as the channel width increased.
- As the manifold size narrowed, the pressure drop increased.
- As the number of cells increased, the pressure drop decreased.
- The pressure drop decreased as the manifold length decreased and its width increased.
- When we increase the length of the manifold and decrease the width, the pressure drop decreases.

When we look at the results, the highest pressure drop is seen in the stack with a 150x6x10 manifold. So what happens if the pressure drop increases? As the pressure drop increases, the inlet pressure must also increase. In this, it is necessary to store hydrogen at high pressure. Storing hydrogen is already a problem. The pressurized transfer is the main problem. At this time, a compressor must be included in the system, which means power consumption.

We see the lowest pressure drop in the stack with a 100x17x10 manifold. And in this stack, the channel widths of the parallel channels are 4mm. From these results, we can see that a stack with the size of stack 1 is more efficient.

As can be understood from the statements given above, fuel cell performance varies depending on many different parameters. The results of the modeling study will shed light on the parameters to be considered in new experimental systems, and will guide the development of new models in micro and meso dimensions or the development of single cells, stacks and systems. It is thought that future studies on these parameters will contribute to improving SOFC performance.

REFERENCES

[1] Z. Zakaria, S.K. Kamarudin "Evaluation of Quaternized polyvinyl alcohol/graphene oxide-based membrane towards improving the performance of air-breathing passive direct methanol fuel cell" Int J Energy Res, 44 (11) (2020), pp. 8988-9000

[2] S. Farrukh, et al. "Hydrogen future: toward industrial applications, in Nanotechnology and the Generation of sustainable hydrogen" Springer (2021), pp. 105-109

[3] Liu B. H, Li Z. P., Suda S., "Anodic Oxidation of Alkali Borohydrides Catalyzed by Nickel", Journal of Electrochemical Society, 2003, 150(3), A398-A402.

[4] P.G. Grimes "Historical pathways for fuel cells", IEEE Aerospace and Electronic Systems Magazine, 15 (12) (2000), pp. 1-10

[5] Hoogers G, "Fuel Cell Technology" Handbook, 1st Ed., CRC Press LLC, Boca Raton-Florida, 2003

[6] P.B.L. Chaurasia, Y. Ando, T. Tanaka "Regenerative fuel cell with chemical reactions" Energy Conversion and Management, 44 (4) (2003), pp. 611-628

[7] J.M.Andujar, F.Segura. "Fuel Cells : History and updating. A walk along two centuries." Renewable and Sustainable Energy Reviews, 13 (9), 2309 – 2322, 2009.

[8] I. Kaya, "Fuel of the Future: Hydrogen Energy and Hydrogen Cells", cilginfizikcilervbi.comgelecegin-yakiti-hidrojen-enerjisi-ve-hidrojen-pilleri, 2021.

[9] Larminie, J. and Dicks, A. 2003. "Fuel Cell Systems Explained "Second Edition.Oxford Brookes Universty, John Wiley & Sons, 978-1-59124-807-1, 418, İngiltere.

[10] Ibrahimoglu Beycan., "Hydrogen Power Generators", Nobel, Ankara, 2008.

[11] Barbir F., "PEM Fuel Cell: Theory And Practice", 2nd Ed., Elsevier, New York, 2005

[12] E Gulzow, M Schulze "Materials For Fuel Cells" Woodhead Publishing Series in Electronic and Optical Materials, 2008 pp 64- 100

[13] Alberto Coralli, ... Nguyen Q. Minh, "Science and Engineering of Hydrogen-Based Energy Technologies", 2019

[14] Dharmalingam Sangeetha, Kugarajah Vaidhegi and Sugumar Moogambigiai "Microbial Electrochemical Technology" India, 2019

[15] Alkaya ,L., Behçet, R.,İlkılınç, C., “Fuel cells and application areas”, “Doğu Anadolu Proje Araştırmaları”, 6 (3), 67 – 71, 2008.

[16] Larmine, J.E., Dicks, A., “Fuel cell systems explained”. John Wiley and Sons, Chichester, England, 2000.

[17] Uzunoglu Mehmet and Alam. S. Mohammad “Power Electronics Handbook” 4 Butterworth – Heinemann, 2018.

[18] Boyacı San F. G., Özdemir S. S., Örs N., Kalafatoğlu E., Bahar “Hydrogen Fuel Cells: Applications and Future in the Automotive Industry” , TUBITAK Marmara Research Center. Materials and Chemical Technologies Research Institute, KM 367, 1-3, 2001.

[19] "High Temperature Fuel Cells" . University of Babylon. Retrieved 1 November 2015

[20] Barbir F., “PEM Fuel Cell: Theory And Practice”, 2nd Ed., Elsevier, New York, 2005

[21] Çetinkaya M. ve Karaosmanoğlu F., “Fuel Cells”, “Mechanical Engineers Chamber of Plumbing Engineering Journal”, 2003, (75), 18-30.

[22] Anwari Makbul, Husodo Budiyanto and Hiendro Ayono “Efficiency and econonomics analysis of Proton Exchange Membrane fuel cell” IPEC, 2010 Conference Proceedings, 2010

[23] Uysal Umit., “Modeling and simulation of PEM fuel cells”, Gebze Institute of Advanced Technology, Graduate School of Natural and Applied Sciences, master's thesis, 2009

[24] Hoogers, G., 2003. “Fuel Cell Technology Technology” G. Hoogers, ed., USA: CRC PRESS Boca.

[25] Nijem Jinan “ Sulfonated Poly (Vinil Alcohol) Mordenite Mixed Matrix Membranes For Direct Methanol Fuel Cells” , Master’s Thesis, Graduate School of Natural and Applied Sciences, 2016

[26] Yu Eileen, Scott Keith “ Principles and Materials Aspects of Direct Alkaline Alcohol Fuel Cells” Energies, 2010

[27] Yu Eileen, Scott Keith “ Principles and Materials Aspects of Direct Alkaline Alcohol Fuel Cells” Energies, 2010

[28] Bossel, U., “The Birth of the Fuel Cell” 1835 -1845. European Fuel Cell Forum, Oberrohrdorf, Switzerland, 2000.

[29] Thomas, S., Zalbowitz, M., “Fuel Cells: Green Power”, Los Alamos National Lab, 1999.

[30] Tabbi Wilberforce, Zaki, El-Hassan, F.N. Khatib, A. Al Makyy, A. Baroutaji, J. G. Carton and A. G. Olabi. “Developments of electric cars and fuel cell hydrogen electric cars”. “International Journal of Hydrogen Energy 42”. 25695 – 25734, 2017.

[31] T. Wilberforce, Z. El-Hassan, F.N. Khatib, A. Al, Makyy A.Baroutaji, J.G. Carton, A.G. Olabi “Modelling and simulation of proton exchange membrane fuel cell with serpentine Bipolar plate using MATLAB” “International journal of hydrogen” (2017).

[32] T. Wilberforce, A. Al Makky, A. Baroutaji, R. Sambi, A.G. Olabi “Computational fluid dynamic simulation and modelling (CFX) of flow plate in PEM fuel cell using aluminum open pore cellular foam material”, “Power and energy conference” (TPEC) IEEE, Texas (2017).

[33] Taqi Inamuddin, S.M.J. Ahmad Cheema, S.U. Rahman Zaidi “Three dimensional numerical investigations for the effects of gas diffusion layer on PEM fuel cell performance” “Renewable Energy”. Volume, 36 (Issue 2) (February 2011), pp. 529-535.

[34] Atul Kumar, G. Reddy Ramana “Effect of gas flow-field design in the bipolar/end plates on the steady and transient state performance of polymer electrolyte membrane fuel cells”, “Journal Power Sources”, 155 (2006), pp. 264-271.

[35] Yuan C. Tang, C. Chang Hsin, C. Chiun Hsun “The experimental study of the effect of flow pattern geometry on performance of micro proton exchange membrane fuel cell”. “World Academy of Science”, Engineering and Technology Int J Mech Mechatron Eng, 3 (7) (2009).

[36] Leila Rostami, Puriya Mohamad, Gholy Nejad, Vatani Ali “A numerical investigation of serpentine flow channel with different bend sizes in polymer electrolyte membrane fuel cells”, “Energy”, 97 (15 February) (2016), pp. 400-410.

[37] Sungho Lee, Heeseok Jeong, Byungki Ahn, Taewon Lim, Youngjin Son “Parametric study of the channel design at the bipolar plate in PEMFC performances” “International Journal of Hydrogen Energy”, 33 (2008), pp. 5691-5696.

[38] H. Yakabe, T. Ogiwara, M. Hishinuma, I. Yasuda “3-D model calculation for planar SOFC” “Journal Power Sources”, 102 (2001), pp. 144-154.

[39] F. Arpino, N. Massarotti “Numerical simulation of mass and energy transport phenomena in solid oxide fuel cells” “Energy”, 34 (2009), pp. 2033-2041

[40] Z. Lin, J. Stevenson, M. Khaleel “The effect of interconnect rib size on the fuel cell concentration polarization in planar SOFCs”, “Journal power Sources”, 117 (2003), pp. 92-97.

[41] R.M. Manglik, Y. Magar "Heat and mass transfer in planar anode-supported solid oxide fuel cells: effects of interconnect fuel/oxidant channel flow cross section" ,"Journal of Thermal Science and Engineering Applications, 7 (4) (2015).

[42] Y. Magar, R. Manglik "Modeling of convective heat and mass transfer characteristics of anode-supported planar solid oxide fuel cells", "Journal of Thermal Science and Engineering Applications", 4 (2007), pp. 185-193.

[43] S.-S. Wei, T.-H. Wang, J.-S. Wu "Numerical modeling of interconnect flow channel design and thermal stress analysis of a planar anode-supported solid oxide fuel cell stack" "Energy", 69 (2014), pp. 553-561

[44] F. Arpino, N. Massarotti Numerical simulation of mass and energy transport phenomena in solid oxide fuel cells Energy, 34 (12) (2009), pp. 2033-2041.

[45] H. Iwai, Y. Yamamoto, M. Saito, H. Yoshida "Numerical simulation of intermediate-temperature direct-internal-reforming planar solid oxide fuel cell", "Energy", 36 (4) (2011), pp. 2225-2234

[46] Li X., Sabir I., "Review of Bipolar Plates in PEM Fuel Cells:Flow-Field Designs", "International Journal of Hydrogen Energy", 2005, 30(4), 359-371.

[47] Li Z. P. Liu B. H., Arai K., Suda S., "A Fuel Cell Development for Using Borohydrides as the Fuel", "Journal of Electrochemical Society", 2003, 150(7), A868-A872.

[48] Razbani, O.,Wærnhus, I., Assad, M.I., "Experimental investigation of temperature distribution over a planar solid oxide fuel cell. Applied Energy", Volume 105: 155-160, 2013.

[49] Dong, Y., Zhu, B., Dawei, F., Jun, L., Xiaopeng, W., Jian, P., BO, C., LI, J., Yisheng, Z., "Feasibility study of an external manifold for planar intermediate-temperature solid oxide fuel cells stack". International Journal Of Hydrogen Energy 38: 660-666, 2013.

[50] Blum, L., Haart, L.G.J.D., Malzbender, J., Menzler, N.H., Remmel, J., Wilckens, R.S., "Recent results in Jülich solid oxide fuel cell technology development". Journal Power Sources 241: 477–485, 2013.

[51] Liu, Z., Ding, D., Liu, M., Ding, X., Chen, D., Lı, X., Xia, C., Liu, M., "High-performance, ceria-based solid oxide fuel cells fabricated at low temperatures". Journal of Power Sources 241: 454-459, 2013.

[52] Sun-Dong, K., Doo-Won, S., Arun, K.D., Sang-Kuk, W., "The effect of gas compositions on the performance and durability of solid oxide electrolysis cells".

[53] "International Journal Of Hydrogen Energy" 38: 6569-6576, 2013.

[54] Wen, H., Ordonez, J.C., Vargas, J.V.C., "Single solid oxide fuel cell modeling, and optimization". Journal of Power Sources 196: 7519– 7532, 2011.

[55] Ortiz-Vitoriano, N., Bernuy-López, C., Ruiz De Larramendi, I., Knibbe, R., Thydénp. Holtappels, K., Rojo, T., Hauch, A., "Optimizing solid oxide fuel cell cathode processing route for intermediate temperature operation". Applied Energy 104: 984–991, 2013.

[56] Wuxi, B., Daifen, C., Zijing, L., "A key geometric parameter for the flow uniformity in planar solid oxide fuel cell stacks". International Journal Of Hydrogen Energy 34: 3873–3884, 2009.

[57] Mauro, A., Arpino, F., Massarotti, N., "Three-dimensional simulation of heat and mass transport phenomena in planar SOFC". International Journal Of Hydrogen Energy 36: 10288-10301, 2011.

[58] Wuxi, B., Jiayu, L., Zijing, L., "Flow uniformity optimization for large size planar solid oxide fuel cells with U-type parallel channel designs". Journal of Power Sources 195: 3207–3214, 2010.

[59] Secanell, M., Wishart, J., Dobson, P., "Review Computational design and optimization of fuel cells and fuel cell systems". Journal of Power Sources 196: 3690–3704, 2011.

[60] Fan, L., Aravind, P.V., Dimitriou, E., Pourquie, M.J.B.M., Verkooijen, A.H.M., "HAD evaluation of solid oxide fuel cell performances with different fuels". International Conference on Future Environment and Energy IPCBEE 28: 80-84, IACSIT Press, Singapoore 2012.

[61] Hawkes, G. L., O'brien, J. E., Stoots, C. M., Herring, J. S., "HAD Model of a Planar Solid Oxide Electrolysis Cell for Hydrogen Production from Nuclear Energy". Nuclear Technology, Vol. 158, pp. 132 - 144, May, 2007.

[62] C. O. Colpan, "Thermal modeling of solid oxide fuel cell based biomass gasification systems", PhD thesis, Department of Mechanical and Aerospace Engineering, Carleton University, 2009.

[63] S.C. Singhal , " Advances in solid oxide fuel cell technology", Solid State Ionics 135 (2000) 305–313

[64] Möbius, H.-H., History, "High Temperature Solid Oxide Fuel Cells: Fundamentals, Design and Applications", S.C. Singhal and K. Kendall, Editors. 2003, Elsevier Ltd.: Oxford, UK. p. 23 - 51.

[65] M. Hattori, M. Iio, Y. Sakaki, in "Seventh International Symposium" on "Solid Oxide Fuel Cells" (SOFC - VII) (S. C. S. H. Yokokawa, ed.), The Electrochemical Society, Tsukuba, Japan, 2001, p. 1061.

[66] M. Hattori, M. Iio, Y. Sakaki, on "Solid Oxide Fuel Cells", "Seventh International Symposium" (SOFC - VII) (S. C. S. H. Yokokawa, ed.), The Electrochemical Society, Tsukuba, Japan, 2001, p. 1061 .

[67] Nakanishi, A., et al. “Development of MOLB Type SOFC”. in “Eighth International Symposium on Solid Oxide Fuel Cells (SOFC VIII)”. 2003. Paris, France: The Electrochemical Society, Inc.

[68] Visco, S.J., et al. “Developmet of Low-Cost Alloy Supported SOFCs”. in “Eighth International Symposium on Solid Oxide Fuel Cells (SOFC VIII)”. 2003. Paris, France: The Electrochemical Society, Inc.

[69] Subhash C Singhal and Kevin Kendall, “High Temperature Solid Oxide Fuel Cells: Fundamentals, Design and Applications” (2003), Elsevier Advanced Technology, The Boulevard, Langford Lane, Kidlington Oxford OX5 lGB, UK, p 205

[70] Milewski Jaroslaw “ Analysis of Design and Construction of Solid Oxide Fuel Cell in Terms of their Dynamic Operation” Poland, 2010.

[71] Carrette, L., Friedrich, K.A., Stimming, U., Fuel Cells: Principles, Types, Fuels, and Applications. Chemphyschem 1: 162-193, 2000.

[72] Timurkutluk, B, “Performance analysis of an intermediate temperature solid oxide fuel cell”, Master's thesis, Middle East Technical University, Graduate School of Natural and Applied Sciences, Ankara, (2007).

[73] Carrette, L., Friedrich, K.A., Stimming, U., “Fuel Cells: Principles, Types, Fuels, and Applications”. Chemphyschem 1: 162-193, 2000.

[74] Singhal, S.C., et al., “Anode Development for Solid Oxide Fuel Cells”. 1986, “United States Department of Energy”: Pittsburgh, PA.

[75] Matsuzaki, Y. and I. Yasuda, “The Poisoning Effect of Sulfur-Containing Impurity Gas on a SOFC Anode: Part I. Dependence on Temperature, Time, and Impurity Concentration”. “Solid State Ionics”, 2000. 132: p. 261 – 269

[76] Möbius, H.-H., History, “High Temperature Solid Oxide Fuel Cells: Fundamentals, Design and Applications”, S.C. Singhal and K. Kendall, Editors., Elsevier Science Oxford, 2003 UK. p. 23 - 51.

[77] Larminie, J.and A, Dicks. “Fuel cell system explained” second edition, Oxford Brookes University, UK.

[78] Simner, S.P. and J.W. Stevenson. “Cathode - Chromia Interactions”. “ SECA 2004 Annual Meeting and Core Program Review”. 2004. Boston: US DOE NETL.

[79] Taniguchi, S., et al., Journal of Power Sources, 1995. 55: p. 73 - 79.

[80] Singhal, S.C., “Recent Progress in Tubular Solid Oxide Fuel Cell Technology,” “Proceedings of the Fifth International Symposium on Solid Oxide Fuel Cells (SOFC – V), The Electrochemical Society”, Inc., Pennington, NJ, 1997.

[81] Köck, W., et al. in “Solid Oxide Fuel Cells IV”. 1995: “The Electrochemical Society Proceedings”, 841.

[82] Ball, R.J. and R. Stevens, “Novel Composite Electrolytes for Solid Oxide Fuel Cell Applications”, “paper presented at the 26th Annual International Conference on Advanced Ceramics and Composites”, Cocoa Beach, FL, January 13 – 18, 2002.

[83] Liu Hong, J. Danıel and Wang Kaı “Experimental Study and Comparison of Various Designs of Gas Flow Fields to PEM Fuel Cells and Cell Stack Performance” Frontiers in Energy Research 2” 2014.

[84] Timurkutluk, B., “Performance anaylsis of an intermediate temperature solid oxide fuel cell”. Phd thesis, Middle East Technical University, 2007.

[85] Tıkız İSMET “Investigation Of The Effects Operating Parameters On Battery Performance In Solid Oxide Fuel Cells.” Phd Thesis, Mechanical Engineering, 2015.

[86] Timurkutluk, B., “Performance anaylsis of an intermediate temperature solid oxide fuel cell”. Phd thesis, Middle East Technical University, 2007.

[87] Harun, Z. Etminan, A. “Numerical Simulation of a Proton Exchange Membrane (PEM) Fuel Cell with Rectangular and Triangular Cross-Section Area Channels”. “The International Journal of Advanced Manufacturing Technology”. 9(4), 282-288, 2020.

[88] Turkmen Anıl Can, “Determination Of Thermal Conductivity Coefficient In Gas Diffusion Layers And Development Of The Nonısothermal Model Of Proton Exchange Membrane Fuel Cell ”, Kocaeli University,2018.

[89] Guo M, Xiao G, Wang J, Lin Z “Parametric study of kW-class solid oxide fuel cell stacks fueled by hydrogen and methane with fully multiphysical coupling model” , Hydrogen Energy, 2020.

CURRICULUM VITAE

PERSONAL INFORMATION

Name Surname : Gulshan ASADOVA

Date of Birth :

Phone :

E-mail :

EDUCATION

High School : Haydar Aliyev Lisesi

Bachelor : Nakhchivan State University

Master Degree : Ankara Yildirim Beyazit University

TOPICS OF INTEREST

- Renewable Energy
- Hydrogen Technologies

PRESENT ORGANIZED SOURCES / PRESENTATION

[1] Asadova. G. & Turkmen. A. C. Investigation of the cross – section area geometry effect on the performance of PEM fuel cell (Fuels, Fire And Combustion ın Engineering Journal), Ankara, Turkey. 2021