ANKARA YILDIRIM BEYAZIT UNIVERSITY

GRADUATE SCHOOL OF NATURAL AND APPLIED SCIENCES



VIRTUAL POWER PLANT APPLICATION FOR MANAGING ROOFTOP SOLAR PHOTOVOLTAIC SYSTEMS

M.Sc. Thesis by

Obed Nelson ONSOMU

Department of Energy Systems Engineering

June, 2020

ANKARA

VIRTUAL POWER PLANT APPLICATION FOR MANAGING ROOFTOP SOLAR PHOTOVOLTAIC SYSTEMS

A Thesis Submitted to

The Graduate School of Natural and Applied Sciences of

Ankara Yıldırım Beyazıt University

In Partial Fulfillment of the Requirements for the Degree of Master of Science in Energy Systems Engineering, Department of Energy Systems Engineering

by

Obed Nelson ONSOMU

June, 2020

ANKARA

M.Sc. THESIS EXAMINATION RESULT FORM

We have read the thesis entitled **"VIRTUAL POWER PLANT APPLICATION FOR MANAGING ROOFTOP SOLAR PHOTOVOLTAIC SYSTEMS"** completed by **OBED NELSON ONSOMU** under the supervision of **PROF. DR. BÜLENT YEŞİLATA** and we certify that in our opinion it is fully adequate, in scope and in quality, as a thesis for the degree of Master of Science.

Prof. Dr. Bulent Yeşilata

Supervisor

Prof. Dr. Abdullah Yıldız

Jury Member

Dr. Öğr. Üyesi Nurettin Beşli

Jury Member

Prof. Dr. Ergün Eraslan

Director

Graduate School of Natural and Applied Sciences

ETHICAL DECLARATION

I hereby declare that, in this thesis which has been prepared in accordance with the Thesis Writing Manual of Graduate School of Natural and Applied Sciences,

- All data, information and documents are obtained in the framework of academic and ethical rules,
- All information, documents and assessments are presented in accordance with scientific ethics and morals,
- All the materials that have been utilized are fully cited and referenced,
- No change has been made on the utilized materials,
- All the works presented are original,

and in any contrary case of above statements, I accept to renounce all my legal rights.

Date: June 05, 2020 **Signature: ……..**

Name & Surname: Obed Nelson Onsomu

ACKNOWLEDGMENTS

Firstly, I would like to express my sincere gratitude to my supervisor, Prof. Dr. Bülent YEŞİLATA for his tremendous support and motivation during my study. His immense knowledge and precious recommendations constituted the milestones of this study. His guidance assisted me all the time of my research and while writing this thesis.

Date: June 05, 2020 **Obed Nelson ONSOMU**

VIRTUAL POWER PLANT APPLICATION FOR MANAGING ROOFTOP SOLAR PHOTOVOLTAIC SYSTEMS

Abstract

This thesis examines the comprehensive definitions of a Virtual Power Plant (VPP) along with how it is integrated with other components to work in synergy. A VPP system is made up of DERs and a centralized control system. A VPP system is named either wind VPP or solar VPP depending on the type of the generation unit.

Investigating the integration of rooftop solar VPPs into the entire systems of traditional grid systems is a prerequisite. MATLAB simulation software is used for building a simplified Solar VPP system. The outputs of generation units are optimized to avoid large turbulences and interference of power dissemination processes. The main control procedure is based on whether there is a surplus or shortage of power. In any case shortage or surplus has to be compensated by the grid.

The VPP network consists of three individual rooftop solar generators connected to the grid. The main goal of a renewable energy-based VPP system is to help reduce energy generation costs and integrate renewable energy sources (RES) into the total power output of the grid, as it indirectly contributes to low levels of carbon in the atmosphere. Several countries are taking the lead in experimentation and installation of solar VPP systems as pilot programs. VPP systems are meant to replace the traditional grids with the collective involvement of consumers and suppliers.

Keywords: VPP, renewable energy sources, decentralized energy resources, solar virtual power plant, rooftop photovoltaic.

ÇATI TİPİ GÜNEŞ FOTOVOLTAİK SISTEMLERİN YÖNETİMİNDE SANAL GÜÇ SANTRALİ UYGULAMASI

ÖZ

Bu tez, bir VPP sisteminin kapsamlı tanımlarını ve görevdeşlik içinde çalışmak için diğer bileşenlerle nasıl bütünleşmiş edildiğini inceler. Bir VPP sistemi, DER'ler ve merkezi bir kontrol sisteminden oluşur. Bir VPP sistemi, Üretim ünitesinin tipine bağlı olarak rüzgâr VPP veya güneş VPP olarak adlandırılır.

Çatı üzeri güneş VPP'lerin Geleneksel ızgara sisteminin tüm sistemlerine entegrasyonunun araştırılması ön şarttır, ilgili yazılım MATLAB'dır ve basitleştirilmiş bir Güneş VPP sistemi oluşturmaya odaklanmıştır. Üretim ünitelerinin çıkışı, büyük türbülansları ve güç yayma sürecinin girişimini önlemek için optimize edilmiştir, ana kontrol prosedürü, fazlalık veya güç kesintisi olup olmadığına dayanmaktadır. Her durumda, eksiklik veya fazlalık şebeke tarafından telafi edilmelidir.

Çatı üzeri güneş Vpp ağı, şebekeye bağlı üç SVPP'den oluşur. Bir RVPP sisteminin temel amacı, enerji üretim maliyetlerinin düşürülmesine ve RES'in şebekedeki toplam güç çıkışına bütünleşmiş edilmesine yardımcı olmaktır, çünkü dolaylı olarak atmosferdeki düşük karbon seviyelerine katkıda bulunur. Birçok ülke pilot programlar olarak SVPP sistemlerinin denenmesi ve kurulumunda liderlik yapmaktadır. VPP sistemleri, geleneksel şebekeleri, tüketicilerin ve tedarikçilerin kolektif katılımıyla değiştirmeyi amaçlamaktadır.

Anahtar Kelimeler: VPP, yenilenebilir enerji kaynakları, merkezi olmayan enerji kaynakları, güneş sanal enerji santrali, çatı üzeri fotovoltaik.

CONTENTS

M.Sc. THESIS EXAMINATION RESULT FORM ii
ETHICAL DECLARATION iii
ACKNOWLEDGMENTS iv
ABSTRACT v
ÖZ vi
NOMENCLATURE ix
LIST OF TABLES x
LIST OF FIGURES xi

CHAPTER 1 - INTRODUCTION 1
1.1. Brief Review of Energy Revolution 1
1.2. Brief Review of RES Progresses in Europe with the Sweden Model 2
1.3. Brief Review of VPP Applications with the Australia Model 4
1.3.1. Development of a Battery for the SA-VPP Project 5
1.3.2 Inverter Disconnection and 10kVA Export limit 6
1.4. Brief Review of Rooftop Photovoltaic Progress in Turkey 8
1.5. Brief Review of Emerging Trends in VPP Market 10
1.6 Aim of the Study 12
CHAPTER 2 – Previous Work 14
2.1. Definitions of VPP 14
2.2. Types of VPP 14
2.3. VPP Services 15
2.4. Main VPP Components 16
2.4.1. Distributed Resources 16
2.4.1.1. Rooftop PV Maximum Power harvesting 18
2.4.2 Energy Storage System 19
2.4.3 Energy Management System 20
2.5. Example of a VPP system 20
2.6. Existing VPP prototypes 21

CHAPTER 3 – Modeling and Simulation 23
3.1. VPP Components in Simulation 23
3.2. Simulation Model in Matlab 24
3.3. Main Grid Model 25
3.3.1. Main simulink Blocks 26
3.3.2. Three Phase Linear and Non-linear load Systems 31
3.3.3. Neutral Block 33
3.3.4. Three-Phase Shunt Active Power Filter 33
3.3.5. Voltage Boost Converter 35
3.4. Measurement Unit (Data Acquisition) 35
CHAPTER 4 – Results and Discussion 38
4.1. Simulation of VPP System 38
4.2. Grid on and off Analysis 39
4.2.1. Power Generation (Grid on/off) 40
4.2.2. Power Generation at STC (Grid on/off) 42
4.2.3. Grid Household Interface Power (Grid on/off) 43
4.2.4. Grid Household Interface Power at STC (Grid on/off) 45
4.3. Storage System Analysis 47
4.4. Non Linear Load Analysis 51

CHAPTER 5 - CONCLUSION 54
5.1. Summary of findings 54
5.2. Future Work 56
REFERENCES 57

APPENDICES 61
Appendix A –Simulink Model and THD Signal Illustration 61
Appendix B – Matlab Household Standard Model 67
Appendix C –Current Boost output 68
Appendix D –Households Power and Non-Linear Load Data Tips 69
CURRICULUM VITAE 73

NOMENCLATURE

Acronyms

DGRE Directorate General of Renewable Energy. YEGM (Yenilenebilir Enerji Genel Müdürlüğü)

RSPV Rooftop Solar Photovoltaic

RE Renewable Energy

CVPP Commercial Virtual Power Plant

TVPP Technical Virtual Power Plant

MPPT Maximum Power Point Tracking

DSO Distribution System Operator

TSO Transmission System Operator

SCADA Supervisory Control and Data Acquisition

THD Total Harmonic Distortion

APF Active Power Filter

FFT Fast Fourier Transform

STC Standard Testing Condition

RES Renewable Energy Sources

GHGs Greenhouse gases

SVPP Solar Virtual Power Plant

TOE Tonne of Oil Equivalent

TWh Terawat hours

IEA International Energy Agency

DH District Heating

TFC Total Final Consumption

TPES Total Primary Energy Supply

LIST OF TABLES

Table 1.1 Estimation of RSPV technical potential 10
Table 1.2 Estimated grid capacity for RSPV in Turkey. 10
Table 2.1 Functions performed by TSO and DSO. 16
Table 3.1 Parametric Identification of a Bus Bar. 26
Table 3.2 PV Components Description 28
Table 3.3 Transmission Grid System Block Parameters 29
Table 3.4 Transmission Line Block Parameters 30
Table 5.1 VPP Platform DERs and Load Active Power 55

LIST OF FIGURES

Figure 1.1 TFC by Source and Sector for the year of 2017 3
Figure 1.2 Sharing Capacity of RES Sweden, 1973-2017……...4
Figure 1.3 AC Front-Coupled Battery Configuration ……..……...6
Figure 1.4 DC Back-Coupled Configuration .....……..……...6
Figure 1.5 Technology Announcement Tesla Powerwall...…….8
Figure 1.6 New Technology Announcement LG Chem RESU 10H...……8
Figure 1.7 Estimated annual RSPV growth in Turkey……..…….9
Figure 1.8 Operation of VPP with Capital flow….……13
Figure 2.1 VPP main components 17
Figure 2.2 I-V characteristics of a typical PV panel with MPPT control.....18
Figure 2.3 Block diagram of a standalone PV system……19
Figure 2.4 Comparison of P & Q with IC under a decrease and increase in irradiation 19
Figure 2.5 The architecture of a VPP 21
Figure 2.6 Structure diagram of EU-ECO Grid project 22
Figure 2.7 Gotland smart grid project 22
Figure 3.1 Rooftop Households Schematic Model in Simulation.....24
Figure 3.2 Run Time Control Block.....24
Figure 3.3 Matlab Simulink Grid, Storage, DERs, Neutral, RLC and Non-Linear Load System Model.....25
Figure 3.4 Bus Bar.....26
Figure 3.5 PV Characteristics of PV array 27
Figure 3.6 PV Electronic Circuit 27
Figure 3.7 Simscape PV Model.....27
Figure 3.8 Transformer Block 28
Figure 3.9 Transmission Grid System.....29
Figure 3.10 Transmission lines.....29
Figure 3.11 Battery Storage System.....31
Figure 3.12 Battery Discharge Characteristic 31
Figure 3.13 Three Phase RLC Linear Block. 32
Figure 3.14 Three Phase Non-Linear Load Simulink Block.....32
Figure 3.15 THD Simulink Block. 33

Figure 3.16 Neutral Simulink Block. 33
Figure 3.17 Basic Scheme of Shunt APF. 34
Figure 3.18 Shunt APF Simulink Block. 34
Figure 3.19 DC Voltage Boost Converter. 35
Figure 3.20 Positive Sequence and Power Phasor Measurement Units. 36
Figure 3.21 Data measurement Scopes. 36
Figure 3.22 Three Phase Measurement Block. 37
Figure 3.23 Shunt APF Three Phase V-I measurement Block 37
Figure 4.1 Illustration of Run time Control Scheme 38
Figure 4.2 Grid Power Representation (Grid on) 39
Figure 4.3 Grid Power at STC (Grid on) 40
Figure 4.4 Households Power at 600W/m^2 (Grid on) 41
Figure 4.5 Households Power at 600W/m^2 (Grid off) 41
Figure 4.6 Households Power at STC (Grid on) 42
Figure 4.7 Households Power at STC (Grid off) 43
Figure 4.8 Power at Point of Common Coupling (Grid on) 44
Figure 4.9 Power at Point of Common Coupling (Grid off) 45
Figure 4.10 Power at Point of Common Coupling at STC (Grid on) 46
Figure 4.11 Power at Point of Common Coupling at STC (Grid off) 47
Figure 4.12 Household1 Energy Storage (Grid on/STC) 48
Figure 4.13 Household2 Energy Storage (Grid on/STC) 49
Figure 4.14 Household1 Energy Storage (Grid off/STC) 49
Figure 4.15 Household2 Energy Storage (Grid off/STC) 50
Figure 4.16 Household3 Energy Storage (Grid off) 50
Figure 4.17 Non-Linear load Power (Grid on/off/STC) 51
Figure 4.18 Non-Linear load Power at STC (Grid on/off) 52
Figure 4.19 THD Signal (Grid on/off) 53

Figure A.1 Matlab Simulink V-I measurement unit, Switch, Shunt APF and Non-Linear Load connection 61
Figure A.2 Non-linear load FFT Analysis at 600W/m^2 (Grid on) 62
Figure A.3 GridHHPower Interface FFT analysis at STC (Grid on) 63
Figure A.4 Non-linear load FFT Analysis at STC (Grid on) 64
Figure A.5 THD Signal at STC(Grid on/off)) 65

Figure A.6 GridHHPower Interface FFT analysis at STC (Grid off) ……...65
Figure A.7 Non-linear load FFT Analysis (Grid off)……....66
Figure A.8 GridHHPower Interface FFT analysis (Grid off) ……...66
Figure B.1 Household Simulink Model…….67
Figure C.1 Current Boost (Grid off)……..68
Figure C.2 Current Boost (Grid on)……...68
Figure D.1 Power Generation Data Tip (Grid on)…….....69
Figure D.2 Power Generation Data Tip (Grid off)…….....69
Figure D.3 Power Generation Data Tip at STC (Grid on)…….....70
Figure D.4 Power Generation Data Tip at STC (Grid off)……70
Figure D.5 Power Consumption Non-Linear Load Tip (Grid on/off)...…….....71
Figure D.6 Power Consumption Non-Linear Load Tip at STC (Grid on/off)...…….....71
Figure D.7 Power Consumption Non-Linear Load Tip (Grid on 72

CHAPTER 1

INTRODUCTION

O. N. Onsomu and B. Yeşilata [1], who are respectively writer and advisor of this thesis, published a proceedings paper[1], regarding with Virtual Power Plant (VPP) applications for managing rooftop photovoltaic (PV) systems. They comprehensively reported arisen need and ongoing research works on VPP applications as part of this thesis work. Therefore some part of this thesis and the proceeding paper coincides, in the form of self-citation, like those given below:

1.1 Brief Review of Energy Revolution

Energy has experienced quite a lot of changes since time immemorial. Historical energy development can be analysed into three stages, Legacy Distributed Power Era (1890-1910), Central station power (1910-1990), and lastly Integrated Energy systems Era (2002-today) [2]. The First Era was mostly made up of small distributed plants while the Second era, large power plants supplied power to far away load centers using AC transmission lines. The Third Era is characterised by a significant rise of small distributed power plants that resulted in re-emergence of DC power which is now under case study, being explored widely by the modern scientific community [3-4]. The Third Era is ongoing and it is divided into two phases.

The First Phase, came into existence due to liberalization of electricity Industry (1986-2002), this era was made evident during the California crisis of (2000-2001), this phase can be termed as a revolutionary process. Changes were ordered and political decisions were made. Consequently, market rules over-powered technical [5], this was due to the Electricity crisis experienced in California (2000-2001). This phase can also be termed as a revolutionary process.

[1] O. N. Onsomu and B. Yeşilata, "Virtual Power Plant Application for Rooftop Photovoltaic Systems," 2019 3rd International Symposium on Multidisciplinary Studies and Innovative Technologies (ISMSIT), Ankara, Turkey, 2019, pp. 1-5, doi: 10.1109/ISMSIT.2019.8932895.

The second Transition phase (2003-today) includes smart grid technology that requires a detailed analysis of a power system. A power system components include a power plant, the grid and the customer. It is also crucial to note that storage systems are part of power plant components. A power plant has to operate continuously without interruption unless repairing is eminent as customers are a key part at the end of the power supply chain. A power system is designed to cope with fluctuating demand and generation from hour to hour and the addition of RES to the power system causes power volatility, making it difficult to incorporate RES into conventional power grids. The idea to use wind and solar energy is as old as power system history, the first small-sized plants (5kW-25kW) were set up in Denmark during the initial Era of power system development [6].

The demand for RES in the 21st century is steadily rising and there are attempts to integrate RES into traditional grid transmission lines. However, RES have a high output and this constraint can strain mid-merit plants by causing fluctuation accompanied by the uncertainty of power supply, whereby generation and load balancing becomes challenging to control [7]. Rooftop PVs are mostly used in residential areas in small scale as they can provide up to 10kWp. Therefore, there is a strong need to set up a VPP platform to generate a single power generation profile to overcome balancing and uncertainty issues in the future.

1.2 Brief Review of RES Progresses in Europe with the Sweden Model

The CO_2 emission is impacting negatively on the ozone layer and as a result, global warming has become the 20-first century challenge. The rise in temperature is causing a gradual rise in sea levels, as small as $\Delta T \cong 2℃$ is slowly and steadily warming the planet. According to the European Union by 2020 electricity from renewable sources should be about 20% of the total electricity generated which is in joint with '20/20/20' goals targeted by the European Commission.

Sweden has the second -lowest (after Switzerland) carbon dioxide (CO_2) emission per Gross Domestic Product (GDP) as per the IEA report for the member countries. It also has the second-lowest CO_2 emissions per capita (after Mexico). Sweden alone is

targeting to generate about 100% renewable energy in its total electricity production by 2040 [8].

The country has one of the highest electricity use per capita in the world. Most of its supply is based on nuclear, hydro and a growing share of wind power making it almost fossil-free, but remains energy-intensive. Through effective government policies it aims to reduce carbon emissions by 40% superseding EU target goal of 20% and by 2050 its net carbon emissions will be negligible. Sweden has the best energy model for Europe and it has strategized by ensuring economic and tax policies are suitable for many stakeholders to participate and help realize its targets.

The Swedish government came up with Renewable Energy Certificate and made it public for electricity suppliers to encourage power production from RES, one is awarded one REC for 1 MWh electricity this forces the suppliers to obtain the certificates depending on how much they sale and produce. Most of its energy is generated through hydropower and nuclear energy. It also has wind power, biomass and solar power.

Solar power plants are scarce due to a six-month winter. Electricity, DH and biofuels form the biggest percentages in terms of energy sources in all the sectors except transport, which is dominated by oil regardless of the increase in biofuels as indicated in Fig. 1.1. The transport sector like most of the countries has the highest dependence on oil products.

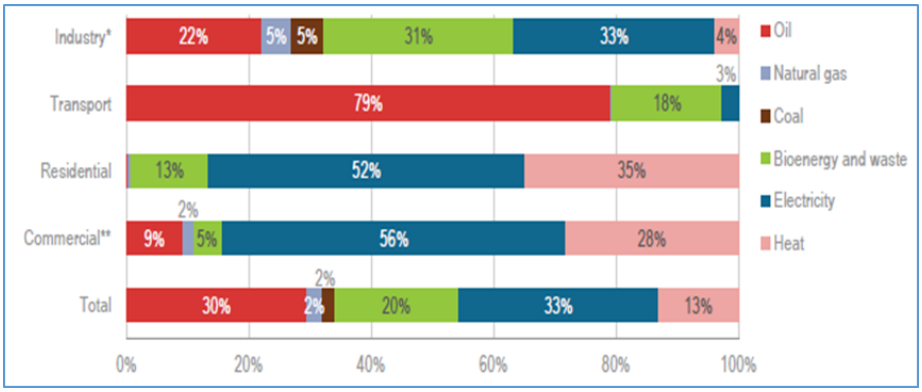

Figure 1.1: TFC by Source and Sector for the year of 2017 [8].

In the year 2017, diesel fuel accounted for 50% of the energy consumption in road transport and gasoline for another 31%. Nevertheless, biofuels have increased rapidly in the transport sector, making Sweden the highest share of renewable transport fuels in IEA member states. For Instance, hydrogenated vegetable oil accounts for the largest share in the Swedish transport sector. DH is the main source for heat and in residential energy consumption, it is among the highest of all the IEA member states. The share of natural gas in the residential sector is, however, the second-lowest of the IEA member states after Norway.

Nuclear power was introduced in 1973-1986 and it has maintained TPES at around 50 million tonnes of oil equivalent (Mtoe) as shown in Fig. 1.2.. Meanwhile, wind power has steadily increased over the years as a result of the electricity certificate system. In 2017, fossil fuels in Sweden's TPES was 30%, which was the lowest among IEA member countries. Consequently, bioenergy and waste supply increased sharply in recent decades and by 2015, it surpassed oil as the second-largest primary energy source after nuclear power.

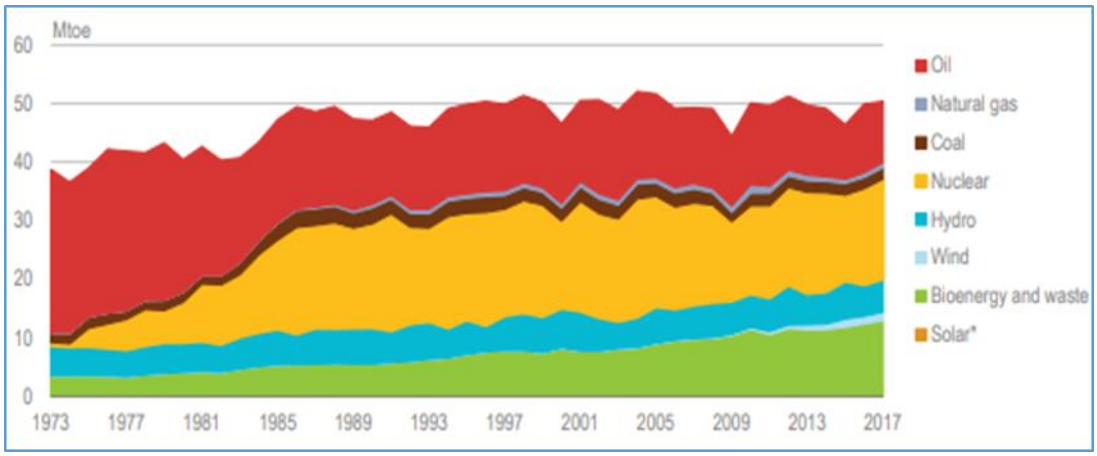

Figure 1.2: Sharing Capacity of RES Sweden, 1973-2017 [8].

1.3 Brief Review of VPP Applications with the Australia Model

The project will demonstrate the value that can be created by grid-connected batteries for stakeholders when the system is managed as a virtual power plant [9]. After completion, the SA-VPP project will have 1000 smart grid-connected batteries with a total output of 5MW and an energy storage capacity of more than 9.8 MWh.

Customers are playing a very significant role in the energy transformation context. This represents a shift from the linear electricity supply chain and adapting to a decentralised bi-directional market enhanced through digital metering, smart inverters, energy storage, and energy management systems. Already household appliances with smart controls have been dispatched to customers.

Policymakers are conducting comprehensive research as to what opportunities and challenges that can result from the integration of new technologies into the grid to assess the high levels of security and reliability issues.

During the Independent Review into the Future Security of the National Electricity Market (Finkel Review) recommendations were passed to the COAG Energy Council to be implemented by the Australian Energy Market Commission (AEMC) and the relevant agencies in consultation. In this regard, the VPP was highlighted in the final Finkel Blueprint as a case study for the effective orchestration of solar and storage to provide multiple services in Australia's evolving energy system. Until February 2017, 47 energy storage systems had been installed and were already operating as a constituent of the VPP. Initial testing was carried out and found successful.

1.3.1 Development of a battery for the SA-VPP Project

AGL energy provider has made an effort to standardise the project hardware in an AC front-coupled architecture. This structure is important, as it can accommodate the Sunverge One Energy Storage System and enable a wide range of solar systems to be connected. The Australian market has a wide variety of PV inverters that have been installed so far. This AC front-coupled system makes it easier for the installer to revisit the site's solar installation as it already exists. AS/NZS 5033:2014; is a standard that acts as a guideline for grid-connected Solar PV systems. The Standard is updated regularly as a result of a sharp increment of rooftop solar uptake since 2008. [9] AS5003 compliance necessitates that any DC back-coupled energy storage system requires the solar PV system to meet its requirements or the current version of the standard. The upgrades are difficult to predict and hold as this calls for frequent visits to the site. Fig. 1.3., shows a high-level schematic diagram of an AC-coupled system. It is imperative to note that the energy storage system inverter and solar inverter are kept separate, this

implies a separate connection to the customer's switchboard. AGL Energy Ltd is Australia's leading public company and on 5th August 2016, it joined a press conference with ARENA and relaid an affirmation on the progress of Virtual Power Plants.

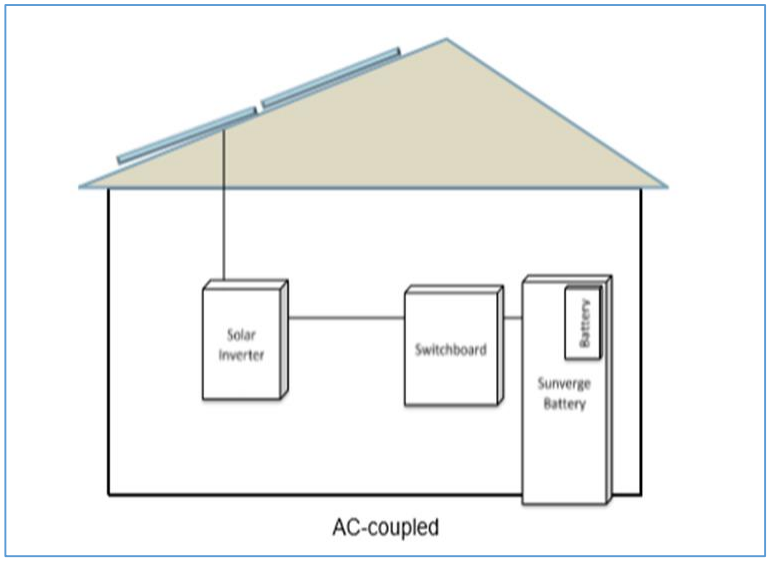

Figure 1.3: AC front-coupled battery configuration.

Fig. 1.4., shows a DC-coupled system. The solar and the storage system are connected and linked to a single inverter.

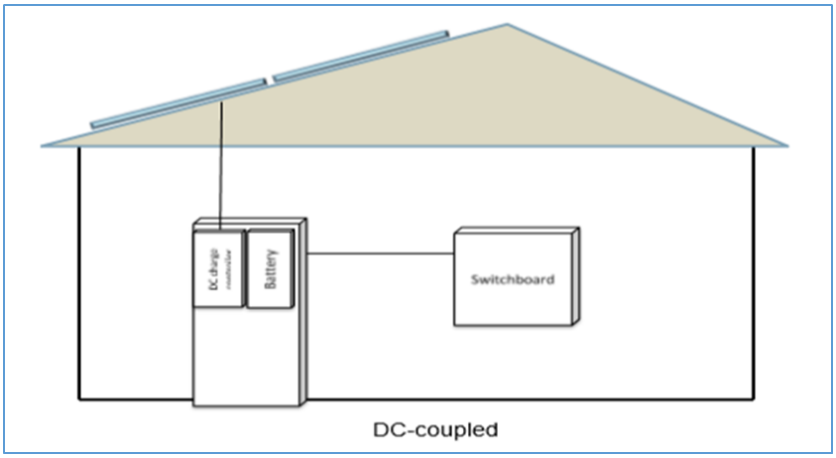

Figure 1.4: DC back-coupled configuration.

1.3.2 Inverter Disconnection and 10kVA Export Limit

Inverters are frequently disconnected due to high grid voltage. 12.5% of energy storage systems experience high voltages (above 256 V). This could trigger anti-islanding under the recent reviewed requirements AS477, this is a major risk as the systems are unavailable when the inverter is disconnected from the grid. A lot of similar systems have experienced grid voltages exceeding 256V and slightly over a third experience disconnection due to high grid voltage. The higher rate of energy storage inverter disconnection is related to the new minimum and maximum voltage and frequency strings in AS4777.1:2015.

The former Australian Standard (AS4777.3: 2005) claimed that inverters disconnect as a result of high voltage especially when V_{max} gets measured for more than two seconds. V_{max} could take values between 230V and 270V. Currently, AS4777.1:2015 requires that the inverter can only disconnect when,

- Slow trip: greater or equal to 260V for two seconds.
- Fast trip: 265V for 0.2 seconds.
- Sustained over-voltage: when the grid voltage is sustained at $V_{nom-max}$ exceeding 10 minutes. $V_{nom-max}$ can take values between 244V and 258V though it is defaulted at 255V.

In both versions, the inverter can reconnect to the grid in case the grid voltage goes back to the normal range or over a continuous period of one minute. AGL has recorded readings exceeding 256V during the day set from 10 am and 6 pm (AECT), which is consistent with high grid voltages as a result of high solar generation levels and low household loads in residential areas.

Installation of more than 10kVA of embedded generation capacity on a single phase is prohibited. This limit was lowered to 5kVA after the AS4777.1:2015 standard version was enacted. It posed a great challenge when the connection was done using Schneider 5kW inverter available in the Sunverge energy storage system. AGL implemented an export limiting function using the Sunverge control software limiting site export to a predetermined value. This value has been adopted as a standard limit for all storage systems.

In March 2018, AGL added two technologies to enhance the SA-VPP program [10]. A vigorous process of selection and technical due diligence process was later carried out, Tesla's Powerwall 2 and LG Chem's RESU10H batteries in Fig. 1.5. and Fig.1.6., were paired to a SolarEdge inverter. The new advancements meant to provide customers up to 35% more capacity and also improve backup functionality. Customers, who had a Sunverge ESS installed were offered a free technology upgrade.



Figure 1.5: Technology announcement Tesla Powerwall.



Figure 1.6: New technology announcement LG Chem RESU 10H.

Approximately 97% of customers reviewed the product-specific of the landing pages, to learn more about the ESS upgrade choices available.

1.4 Brief Review of Rooftop Photovoltaic Progress in Turkey

Turkey is a pivotal player when it comes to installation and possession of clean sources of energy, it has had tremendous growth for two consecutive decades and this has been

facilitated by the presence of a low per capita electricity consumption, rapid urbanization and strong economic growth.

Turkey has voiced its commitment through the Turkish Energy Market Regulatory Authority (EMRA), a body that accepts applications from the public for the installation of Rooftop PVs. At the end of 2007, households in Turkey with a production range of 3kW to 10kW were allowed to supply their own electricity to power distributors [12]. Solar Power Europe projects Turkey to take the third position in EU countries after the addition of new capacities covering 2017-2021.

Rooftop PV is a potential market in Turkey as World Bank Group [13] suggests; its value to rise to an estimated value of 3.9 GW. Despite rooftop PVs having large prospects there is a need to develop advanced data management and monitoring techniques, to process and coordinate multiple Rooftop PV for efficient power transmission [14]. According to DGRE the market potential of rooftop penetration in Turkey is estimated in three scenarios: (a) 1.8 GW-Basic Scenario, (b) 4.0 GW-Medium advanced scenario, and (c) 7.5 GW - Advanced Scenario. The annual rooftop penetration was estimated by the S-curve trajectory as shown in Fig. 1.7..

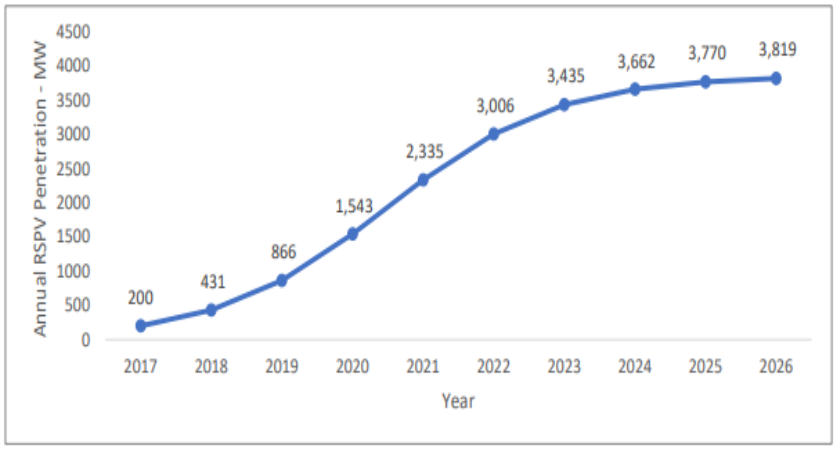

Figure 1.7: Estimated annual RSPV growth in Turkey [14].

The technical potential of RSPV is also considered and assumes technical due diligence of RSPV is carried out before being installed it is estimated to be 46.8 W, as shown in

Table 1.1, however, it is not feasible as it depends on physical or economical viability [14].

Table 1.1 Estimation of RSPV technical potential

Building Type	# of Buildings (in thousand)	Base Area (million m^2)	Weighted Average Usable Area	Usable Area (million m^2)	RSPV Technical Potential (GW)
Residential	8,230	1,269	47%	596	**23.2**
Commercial and Industrial	950	875	57%	499	**21.5**
Public	69	93	45%	42	**2.1**
Total	9,248	2,237	-	1,137	**46.8**

RSPV systems are estimated to provide 30% of the total RE grid capacity, with all the factors taken into consideration, grid capacity was approximated to be 6.5 GW for the next 10 years. The market potential of RSPV is another domain that arouses interest in procurement and installation of RSPV, the analysis considered the already installed capacity and then compared growth rates among different countries, as well as affordability and creditworthiness of customers as indicated in Table 1.2, therefore, the market potential was found to be about 3.9 GW.

Tabel 1.2 Estimated grid Capacity for RSPV in Turkey

RSPV Sectors	Grid Capacity for RSPV (MW)	Income Level - Impact Factor	Creditworthiness - Impact Factor	RSPV Market Potential (MW)
Residential: Single-family	764	0.5	0.8	306
Residential: Multi-family	2,519	0.3	0.5	378
Residential: Total	*3,283*			*683*
Commercial	1,488	1	1	1,488
Industrial	1,523	1	1	1,523
Commercial & Industrial: Total	*3,011*			*3,011*
Public	291	0.7	0.8	163
Total (MW)	***6,585***			***3,858***

1.5 Brief Review of Emerging Trends in VPP Market

The number of small generating units is on a sharp increase, necessitating minimum requirements, so that, these generation systems can be connected to the grid and

participate in the larger market. VPP systems have created diverse markets and enabled stakeholders to participate in the generation of electricity, these stakeholders apart from the well-known utility companies are referred as prosumers. For various players to take part in the market, bidding strategies are important in determining the information related to Power, Price, Area and at what time the participants can buy and sell. There are two models that enable bidding to take place: Equilibrium model and Non-Equilibrium Model.

The equilibrium models have some shortcomings as they do not consider minimum on/of time, ramp limits and both start-up and shut down costs, this is as a result of a Unit Commitment (UC) challenge. While a Non-equilibrium bidding model is for a joint market and it is purely based on the deterministic price-based unit commitment (PBUC), that takes both supply-demand and security balancing constraints of the VPP into account [15]. This model defines specific parameters of the VPP elements and generates a single operating profile, though uncertainties of the prices are not taken into consideration with this kind of model.

[16], [17] takes into account a probabilistic PBUC that considers a bidding strategy for the day-ahead market, this bidding problem has two stages. The first stage uses a mixed integer non-linear programming (MINLP) that solves a probabilistic PBUC. The uncertainties are dealt with by using a point estimate method, while in the second stage the network constraints are factored in.

VPP is a flexible system and it can participate in day-ahead and balancing markets [18] and to some extent include inelastic load of the consumer alongside renewable sources. A robust approach is also proposed [19] for a VPP that has price responsive demands, a solar VPP and a battery system in both day-ahead and real-time markets. Demand response and game theory are also used to dispatch multi VPPs models. Moreover, a distributed optimal dispatch method that uses distributed primal-dual subgradient algorithm to achieve higher profit values for VPP is suggested [20], this is obtained best by coordinating individual decision making of DERs in the VPP through a controlled communication.

Profit distribution can also be based on Shapley Value, which Shapley LS proposed in 1953 so as to solve multiparty cooperation, in the sense that the entities involved in economic activity, with each cooperation gaining some profit, and incase the entities economic activity is not confronting, then the increase in the number of entities that take part in the cooperation would not reduce the net alliance profit. The total profit is maximum when all the entities join the alliance. The method provides a profit distribution scheme for the alliance, depending on the marginal contribution of the members' entry to the total profit, leading to the circumvention of the average profit and members gain their profit according to their value to the alliance. For the alliance, the bigger the contribution the more the profit distributed from the alliance.

The structure in Fig. 1.8.. shows an advanced VPP platform with a control centre, wind-power plant, solar photovoltaic power, an energy storage system and the load. The solid line indicates power flow, and the dashed-dotted one illustrates the capital flow and the information flow. In the structure, the VPP control centre can exchange information with DERs, ESS, load, distribution network and electricity market.

In addition, VPP control centre receives income status, pays for the costs and allocates profits to prosumers. Fundamentally, a VPP system must make maximum usage of the ESS [21].

1.6 Aim of the Study

The study aims to design a platform to incorporate RE into the Grid. Residential or commercial rooftops are integrated into the power transmission system using a top-notch power-sharing platform VPP. The number of RSPV penetration into the market has gone up for almost a decade. This emergence has led to scientists carrying out more experiments to improve efficiency, and to a larger extent obtain more power as a result of advancing harvesting capabilities of RSPVs using MPPT algorithms. Aiming to attract more customers and producers to adopt cheaper means of generating energy.

This study covers a wide range of concepts associated with rooftop virtual power plants. The design of a VPP network structure is important for monitoring the impact of PVs on the grid power supply. Three Rooftop PVs are proposed (generational units), three

dynamic loads, three storage energy systems and the grid network. They are monitored independently then collectively for evaluation of power purposes. Matlab Simulink tool is used to design and implement the VPP system structure.

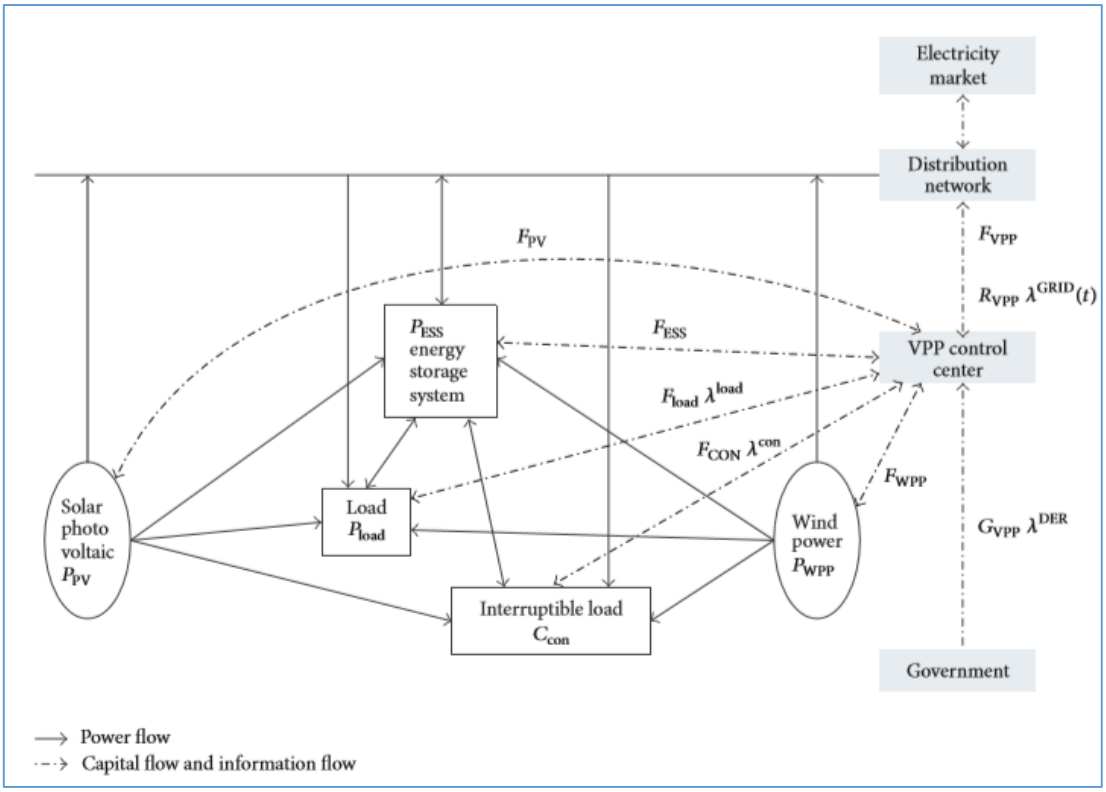

Figure 1.8: Operation of VPP with Capital flow.

CHAPTER 2

Previous Work

2.1 Definitions of VPP

A VPP system has different definitions and the most common definitions are listed below.

a) A VPP system is an aggregation of different types of distributed resources that may be dispersed in different points of medium voltage distribution networks.
b) A structure made up of various technologies with various operating patterns and availability which they can connect to different points of distribution network.
c) A VPP system can also be a flexible representation of a portfolio of DERs that can be used to make contracts in the wholesale market and offer services to the system operator.
d) [22] According to the Fenix project concept A VPP system aggregates the capacity of many diverse DERs, it creates a single operating profile from a composite of the parameters characterizing each DER and can incorporate the impact of the network on aggregate DERs output.

2.2 Types of VPP

The functions performed by a VPP system are complex. A well thought and designed approach is defined, so as to control all the components incorporated into the grid network. The main objective is to support and regulate grid power by reducing energy losses and generating energy at lower costs. It can be classified into two categories CVPP and TVPP.

CVPP is defined as a VPP system that has an aggregated profile and output which represents the cost and operating characteristics for the DER portfolio. The impact of the distribution network is not considered in the aggregated CVPP profile. Its functions or services include taking part in the wholesale energy market, balancing trade portfolios and provision of services to the system operator, who in most cases is a third

party or a Balancing responsible Party (BRP) with access to the market also known as an energy supplier.

TVPP performs the function of modeling the characteristics of a system that contains an aggregation of DERs and acts as a single power plant. All DERs in a TVPP are from the same geographical location unlike CVPP, whereby, all DERs are from different locations. Besides, it models the real-time influence of the local network on DERs. Its functions and services include acting as local system management for DSO and providing balancing and ancillary services to TSO. The Operator of a TVPP must have detailed knowledge on the local network in this case DSO.

2.3 VPP Services

1. **Frequency control**

Frequency is related to both generation and consumption and only TSO is responsible for controlling the frequency, for instance, the TSO can change the on-load tap changer to tune the frequency.

2. **Voltage control**

Voltage is related to the reactive power which is commonly adjusted by both TSO and DSO. The former can use Static Synchronous Compensator (STATCOM) to adjust the voltage at different points in the transmission line, while the latter can tune the reactive consumption by power electronics, so as to control voltage.

3. **Flow control**

Power flow in the transmission line is affected by voltage. In essence, voltage control depends on both the TSO and DSO.

4. **Stability enhancement**

Stability hitches exist on the transmission line, the oscillation of the frequency can result in stability challenges that can lead to unsteady power flow. TSO is responsible for stability enhancement.

5. **Security and reliability enhancement**

TSO and DSO are responsible for overall security and reliability. Table 2.1 shows functions performed by both TSO and DSO.

Table 2.1 Functions performed by TSO and DSO

Service	TSO	DSO
Frequency control	X	
Voltage control	X	X
Flow control	X	X
Stability and enhancement	X	
Security and reliability enhancement	X	X

2.4 Main VPP Components

VPP system components can be specified by two levels; macro and micro levels. At a macro level, the main components include, distributed energy resources, energy storage systems and information and communication technologies, while at micro-level sensors and other smart technological acquisition devices are incorporated into the network. SCADA tool is used to monitor and manage communication processes, due to its high-level process control and management capabilities. The main VPP components are outlined below [22].

2.4.1 Distributed Resources

DERs can be grouped into four main parts,

a) Type of primary energy sources.
   - Generators that use RES (wind-based generators, photovoltaic arrays, solar-thermal systems, and small hydro-plants).

- Generators that use Non-RES (Combined Heat and Power (CHP), biomass, biogas, diesel generators, gas turbines, and fuel cells (FC)).

b) The capacity of the distributed generators.

- Small-scale capacity DGs that can be connected to form microgrids and can participate in the VPP.
- Medium and large scale capacity DGs can be connected to VPP to gain steady revenue.

c) Ownership of the DG units.

- Residential, Commercial, and Industrial-owned DGs are used to supply part/all of its load in its premises also known as Domestic DGs.
- Utility-owned DGs are used to support the main grid are referred to as Public DGs (PDG).
- Commercial company-owned DGs also called Independent Power Producers DGs (IPPDG).

d) DGs operational nature can be classified into,

- Stochastic: In the case of wind-based and photovoltaic DG units.
- Technologies such as FCs and micro-turbines have an operational dispatchable nature. They are capable of varying their operation quickly.

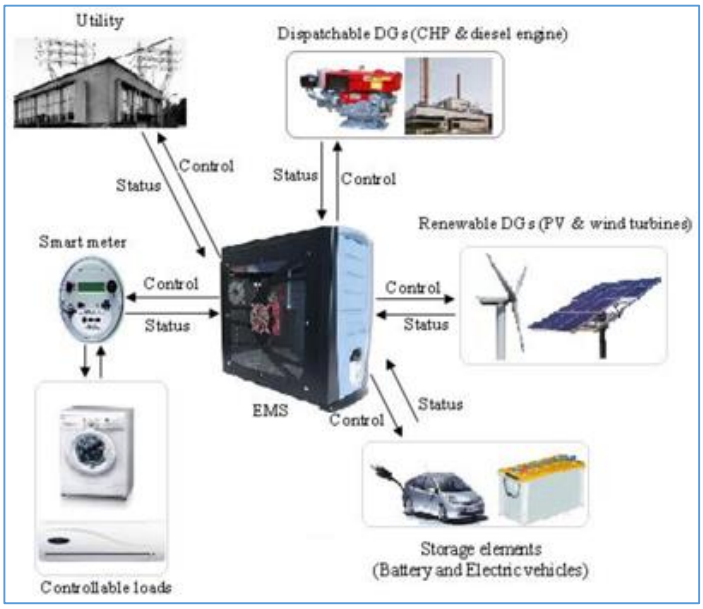

Figure 2.1: VPP main components [22].

2.4.1.1 Rooftop PV Maximum Power Harvesting

Rooftop PV efficiency is largely affected by a variety of constraints hindering the maximum power that can be harvested. Constraints such as efficiency and prevailing weather conditions interfere with the amount of PV power output. The approach of using the Maximum Power Point Tracking technique can ensure the amount of electricity generated is always within the required demand. Maximum efficiency varies with isolation and there is always a unique point on the PV panel, that has maximum power point as indicated in Fig. 2.2.

The approach employs two important methods; Perturbation & Observe and Incremental Inductance. The former operates by increasing or decreasing the array terminal voltage or current at predetermined steps, these iterations enable comparison of PV power output with the latest sample point. It is a simple technique as it does not require PV panel characteristics. The latter functions by overcoming the limitations of P & O. It uses the incremental conductance of the PV by searching the voltage operating point, whereby, conductance is equal to the incremental conductance and finally stops perturbing the operating point.

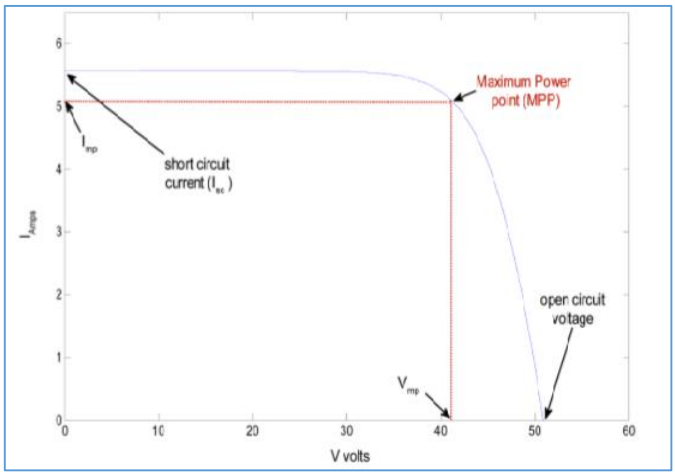

Figure 2.2: I-V characteristics of a typical PV panel with MPPT control [23].

Fig. 2.3., shows a Simulink block for a standalone PV system and Fig. 2.4., shows MPPT (P&O) compared with MPP(IC) under a decrease and increase in irradiation [26].

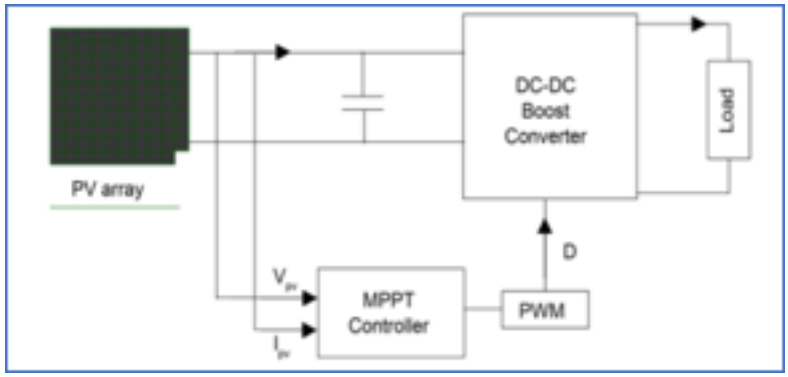

Figure 2.3: Block diagram of standalone PV system.

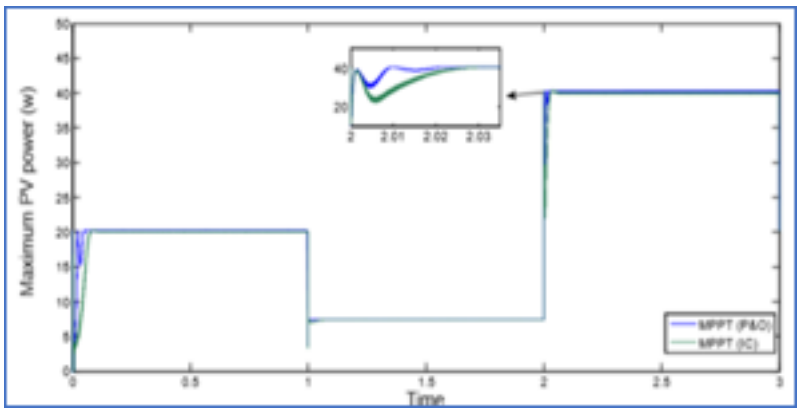

Figure 2.4: Comparison of P&O with IC under a decrease and increase in irradiation.

2.4.2 Energy Storage System

Energy storage elements (ESEs) can store energy during off-peak periods and free it during peak hours. It can also redistribute power from one decentralised resource to another during the day. ESS can be classified according to the applications below:

a) Energy supply class:

- Hydraulic Pumped Energy Storage (HPES)
- Compressed Air Energy Storage (CAES)

b) Power supply class:

- Flywheel Energy Storage (FWES)
- Super Conductor Magnetic Energy Storage (SMES)
- Super Capacitors

2.4.3 Energy Management System

Energy Management System (EMS) manages the operation of VPP components, through communication technologies in bidirectional ways. It obtains the status of DERs in the network and sends communication signals to individual resources. Instructing them to import or export power in relation to the demand and supply in the transmission grid network. It has the following responsibilities:

- Receiving information about the status of each element inside the VPP.
- Forecasting of output power generated from RES.
- Forecasting and management of loads.
- Coordinating the power flow between the VPP elements.
- Controlling the operation of decentralised generators, storage elements and controllable loads.

2.5 Example of a VPP System

Fig. 2.5., shows a VPP system infrastructure fully installed. The system contains a solar power plant, combined heat and power unit and a wind-power plant as examples of generational units. It also has a battery and a consumption unit (Household load). These units are connected through a transformer and a control centre. The control centre sends and receives measurement information and in return gives command signals.

When RES cannot meet the power demand of the load, then power is dispatched from both the storage system and the conventional power generators. Such dispatch functions are handled in the control centre, by the appropriate use of optimized control schemes embedded in the arithmetic and logic unit of the control centre. All the control commands rely on this scheme for the arrangement of generational units and storage units. In addition, the control scheme performs optimization of profits at the same time ensures VPP network stability. A VPP system is a new concept, unlike generational units and storage technologies that have existed for many years. Therefore, the main hiccup existing is; how to aggregate existing units together and control them in an optimized way through the usage of Information and Communication Technology.

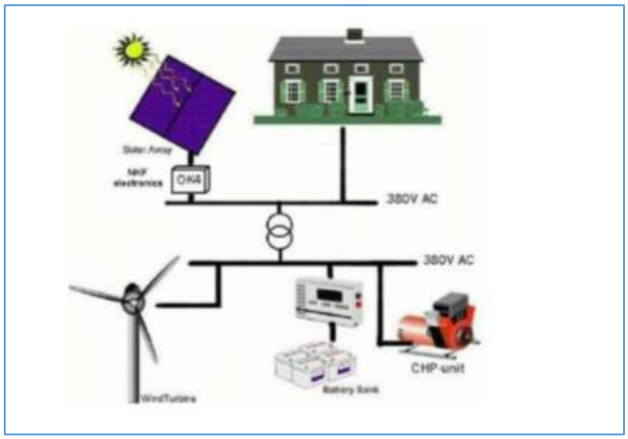

Figure 2.5: The architecture structure of VPP [24].

2.6 Existing VPP prototypes

FENIX

Advanced research on VPP platforms in Europe has been going on for some time, under the forum; Flexible Electricity Network to Integrate the eXpected energy evolution (FENIX). It is lead by major Research Centres, Universities, Transmission and Distribution Utilities, equipment and ICT manufacturers, DER owners and institutional bodies charged with the responsibility of regulation and standardization i.e in countries like UK, France, Germany, Netherlands, Romania, Spain and Austria. It started in the year 2004 and ended in 2009. The main objective is boosting DER (Distributed Energy Resources) by maximizing their contribution to the electric power system, through aggregation into Large Scale Virtual Power Plants (LSVPP) and decentralized management.

It is noted that during the demonstration of the project. The simulated power output of DERs within SCADA/E-terracontrol and in aggregate with E-terratrade was monitored. E-terratrade and IPO systems successfully responded to acceptances from a simulated balancing market and interacted with ECN‘s PowerMatcher, which then controlled the generation resources in the laboratories of ICL.

EU-EcoGrid

Example of the VPP implemented in Denmark, named EU-EcoGrid project [25].



Figure 2.6: Structure diagram of EU-Eco Grid project [26].

EU-Eco grid project DER units has a 36 MW of wind power, a 16 MW biomass plant, and 2 MW Biogas, 2MW Photovoltaic (solar) plant and a new fleet of electric cars. It started mid-2011 and lasted for 4 years.

Smart Grid Gotland

It is a 4-year demonstration project in Sweden. It implements the concept of VPP in the Demand Response Management System (DRMS) in the biggest island of Sweden, Gotland. The project is funded by the Swedish Energy Agency and it started from the year 2012 in September. It is worth 23 million SEK.

It performs aggregation of the distributed wind farms and balances the power between generation and consumption, by storing the surplus in a battery storage facility and trades the rest of the power with mainland Sweden through HVDC.



Figure 2.7: Gotland Smart Grid Project.

CHAPTER 3
Modeling and Simulation

The model structure is designed and simulated using MATLAB Simulink, which is open software. The design has four main fundamentals, the main grid, generational units, non-linear loads and energy storage units, which are the key components that make up a VPP system. In order to attain scientific objectives of this thesis three Rooftop PV models are coupled with the main grid network and then behavioral analysis of power is obtained for comparison purposes.

3.1 VPP Components in Simulation

The Three Rooftop PV systems are connected to the Grid transmission lines after passing through an infinite number of buses. There are also micro-elements that include RC linear loads, transmission lines and transformers. This system can exist in a small geographical location to manage small scale household generational units.

At the centre of the system, though not part of the comprehensive study of this thesis is a control centre that uses a run-time control scheme. The scheme works by analyzing power requirements of the load, then takes input from household 1 and if there is a shortage, then household 2 is charged with the responsibility of compensating the demand required by the load, Fig. 3.1. shows three Solar PV generational units of the components used in the simulation.

For the purposes of clarity and understanding, the central controller is an advanced combination of logic algorithms that manage signals to keep the grid balanced. The run-time control block is shown in Fig. 3.2., as one of the proposed control scheme used for demand and resource allocation.

In the Goto block, the control demand signal contains the difference between the active power consumed by the load and the active power supplied by a specified generational unit. This value is changed into pu and later sent to another specific generational unit to cater for the remaining load power demand. The generational unit which has surplus power has both upper and lower limits.

In case the calculated value is over the upper limit, then the transmission grid supplies power to balance the active power. The switch samples the first 20 intervals and gives a constant value to block the channel. As the 21st sampling interval starts the channel is activated again and the command originates from the next constant value.

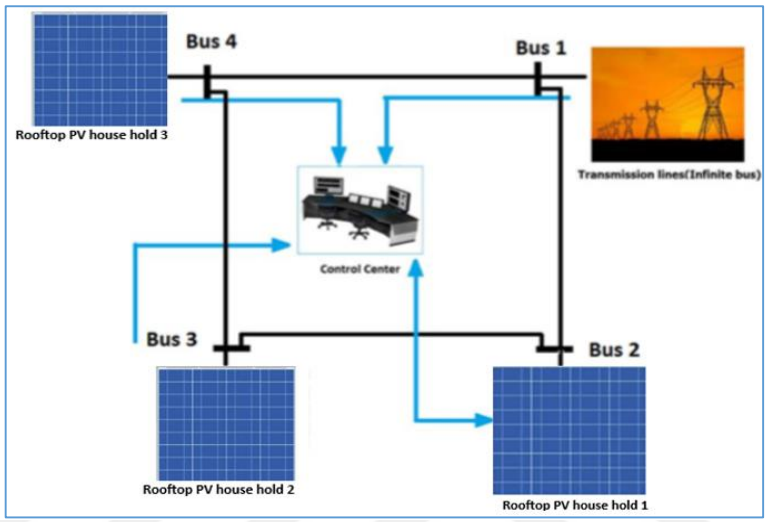

Figure 3.1: Rooftop Households Schematic Model in Simulation.

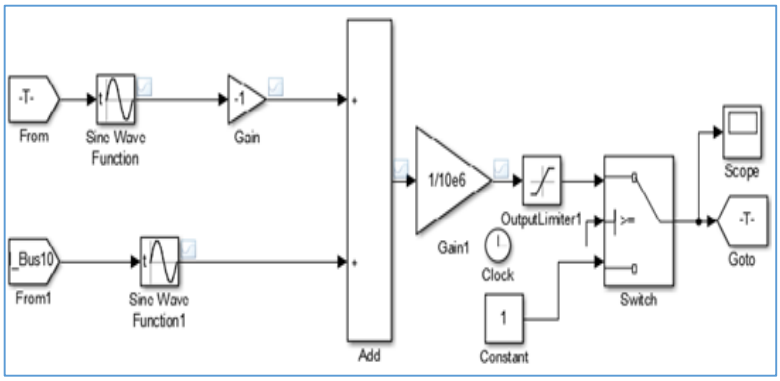

Figure 3.2: Run time Control Block.

3.2 Simulation Model in Matlab

Fig. 3.3., shows a Matlab Simulink Main Grid Model.

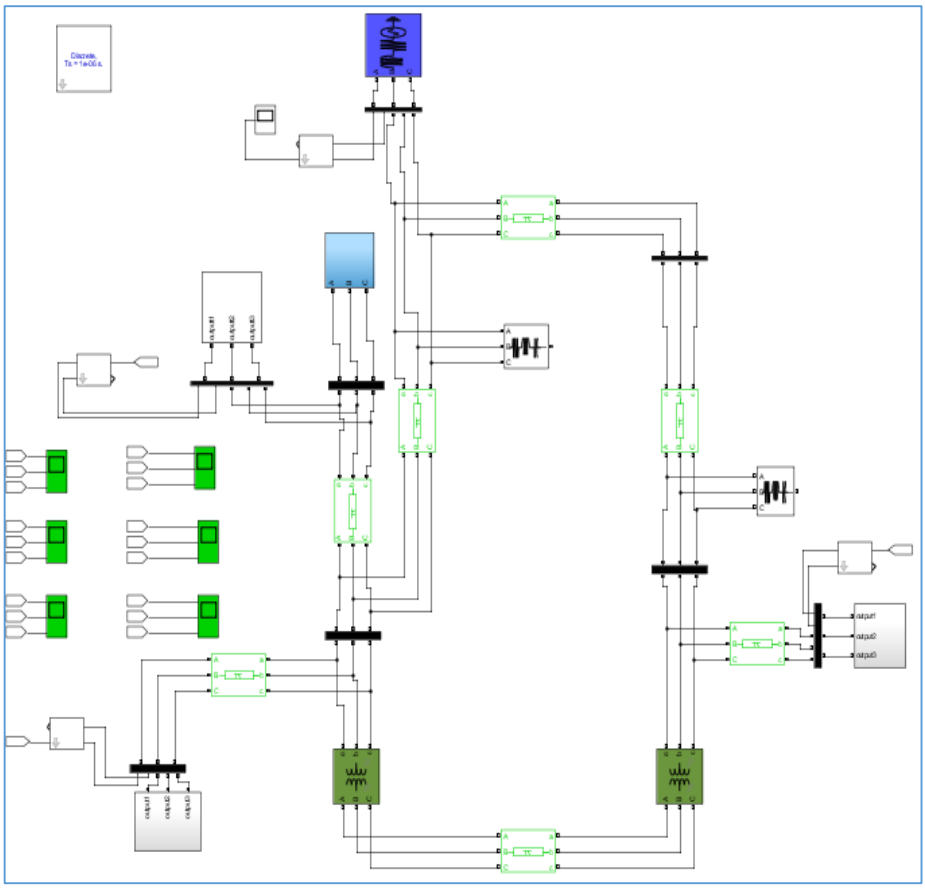

Figure 3.3: Matlab Simulink Grid, Storage, DERs, Neutral, RLC and Non-Linear Load System Model.

The above model contains Transmission Grid, Rooftop PVs (HH1, HH2, HH3) and RLC linear loads, within the households non-linear loads and shunt power filters are included. The filters are designed to get rid of harmonics created by non-linear loads. All these units are connected through the use of transmission lines. The Main Grid system model has a total of 8 buses. Simulink Model forms a square structure, whereby, diverse components are integrated and attached with ease.

In the left section of the model, there are two Rooftop PV models at the upper and lower parts. At the top end of the model, there is a Transmission Grid system and at the right section lower part there is a Rooftop PV system representing household3.

3.3 Main Grid Model

The main grid has several components from power stations to consumers, in the conventional grid systems most generational units use fossil fuels to produce electricity,

but the invention of smart grids both production and storage of electricity are revolutionizing the entire energy sector.

The core components in the study include; PV generational systems, Transmission Grid System, Buses, Transmission lines, transformers, Storage and load systems. These components are represented as Matlab Simulink blocks.

3.3.1 Main Simulink Blocks

Buses

Buses connect all the units through transmission lines. It is the location in which the measurement of voltage and current are detected and sent to the measurement system. Fig. 3.4., shows a Three-phase Voltage and Current Bus bar.

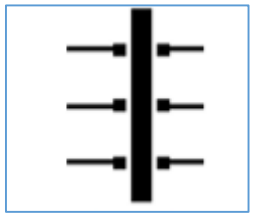

Figure 3.4: Bus bar.

Table 3.1 Parametric identification of a Bus bar

Name	Value
Voltage Measurement (V)	Phase to ground
Current Measurement	Yes

PV System

PV array power and voltage characteristics are shown in Fig. 3.5.. The PV Electronic Circuit Schematic block is shown in Fig. 3.6.. Simulink block is accessed through simscape a Matlab modeling tool shown in Fig. 3.7.. Solar panels contain solar cells that convert sunlight into electrical energy using the photovoltaic effect.

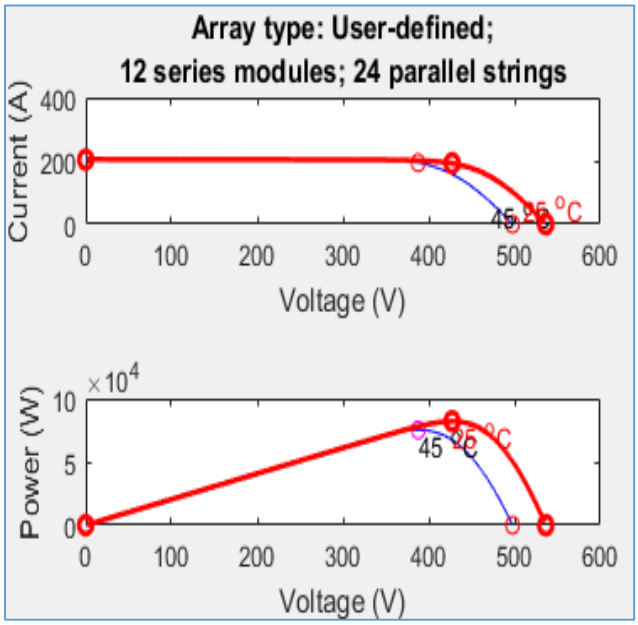

Figure 3.5: P-V characteristics of PV array.

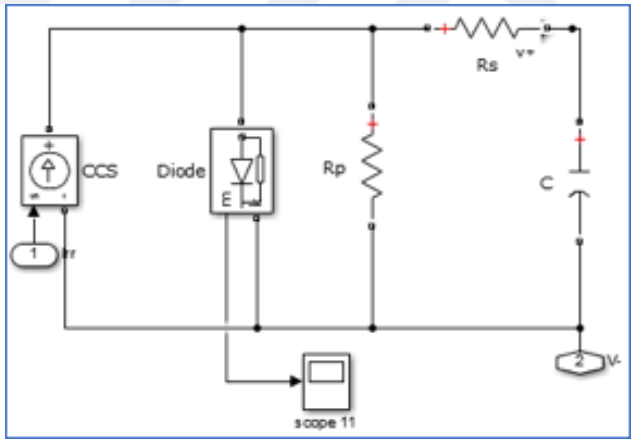

Figure 3.6: PV Electronic Circuit.

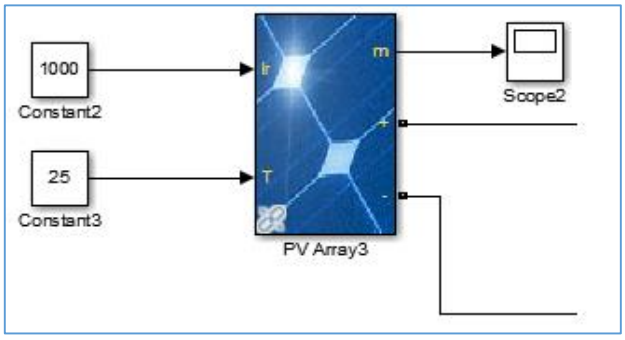

Figure 3.7: Simscape PV Model.

The output of a PV module depends on the solar insolation and cell temperature. In this study, simulation is time-based meaning the model simulation time is used. Table 3.2, shows the component description of a PV system.

Table 3.2 PV Parameter Description

NAME	DESCRIPTION
Maximum Power	**285W**
Open Circuit Voltage Voc	**44.7V**
T-cell (deg c)	**[45 25]**
Maximum power voltage	**35.6 V**
Maximum Power Current	**8.02 A**
Module efficiency	**14.7%**
Short circuit current	**8.5 A**

Transformer

Fig. 3.8., shows a Transformer Block. The Main Grid model has two Transformers T1 and T2. T1 is between Bus 6 and line 5 while T2 is between lines 5 and Bus 7. Both Transformers are rated with a nominal power and frequency values of 250e6 VA and 50 Hz respectively.

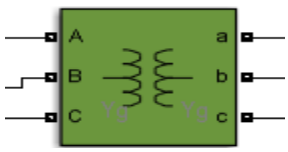

Figure 3.8: Transformer Block.

Transmission Grid

It is a large Transmission system as shown in Fig. 3.9..The grid is characterized by a constant voltage at bus 13. The reactive power inside the VPP system can not interfere with the voltage at Bus 13.

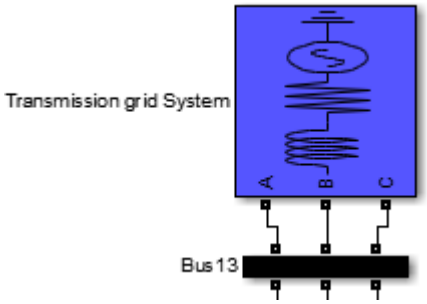

Figure 3.9: Transmission Grid System.

Table 3.3, describes the parameters of the Transmission Grid System.

Table 3.3 Transmission Grid System Block Parameters

Name	Value
Phase to Phase (Vrms)	400
X/R	0.55
Frequency	50
Connection Type	Yg

Transmission Lines

They are in between the generational units, storage systems and loads. They are connected to the buses that form direct links to the aforementioned systems or VPP tools. Transmission lines are installed at predefined distances in reference to the Transmission Grid System. They have both resistance and inductance which are in parallel to each other. Capacitance is approximately zero and is therefore neglected.

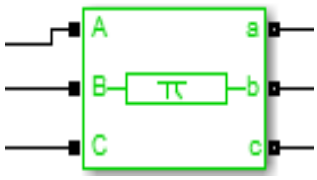

Figure 3.10: Transmission Lines

Table 3.4 Transmission Line Block Parameters

Name	Value
Frequency used for rlc specification (Hz)	50
Positive- and zero-sequence resistances (Ohms/km) [r1 r0]	[0.01273 0.3864]
Positive- and zero-sequence inductances (H/km) [l1 l0]	[0.9337e-3 4.1264e-3]
Positive- and zero-sequence capacitances (F/km) [c1 c0]	[12.74e-9 7.751e-9]

Storage System

It is an essential component in the VPP platform as it stores energy by being charged from the generational units, at the same time discharges when energy demand is high. Resistances and capacitors are used to model the cell dynamics.

For the assessment of the battery technology two accounts are considered; that is the State of charge of the battery and Deep of charge of the battery. These two accounts are derived on the arrangement of the resistors and capacitors, whereby, the first combination of resistor and capacitor in a cell represents the state of charge and the second combination of the same elements, represents deep of the charge.

Generally, resistance is temperature sensitive and both charging and discharging events are associated with plate resistance and fluid resistance. Frequency also affects charging and discharging scenarios of the battery in hybrid energy storage systems, whereby, changing from charging to discharging interferes with the battery longevity. Fig. 3.11., shows a Simulink Battery Storage System block. Fig. 3.12., shows Battery Discharge Characteristics.

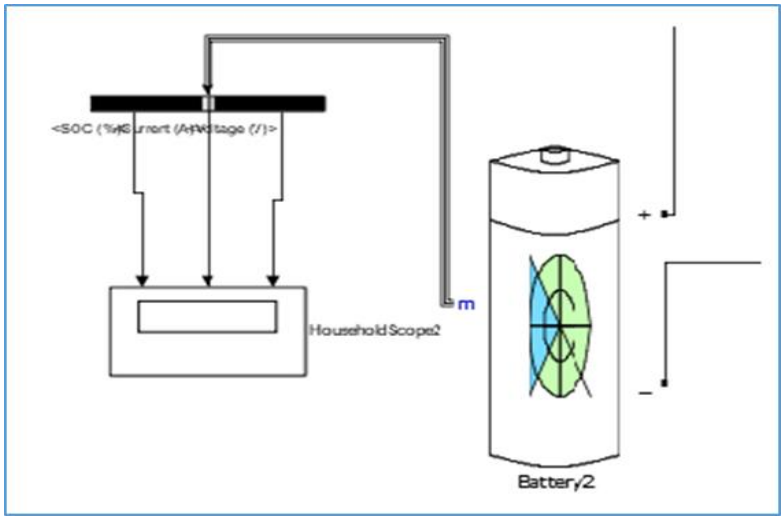

Figure 3.11: Battery Storage System.

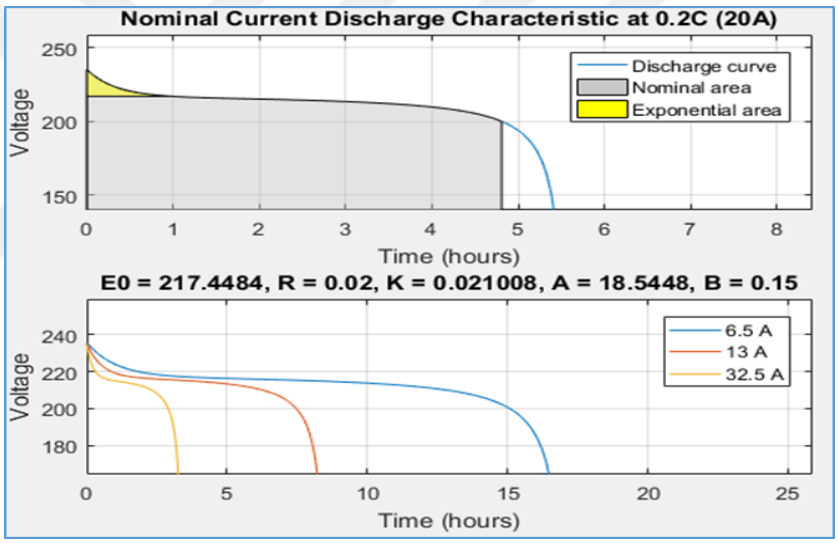

Figure 3.12: Battery Discharge Characteristic

3.3.2. Three Phase Linear and Non-Linear load System

Load systems are also connected to the distribution systems. In linear loads the current and voltage are sinusoidal and current is proportional to voltage all the time, an example of Linear loads are Power factor improvement capacitors and Heaters. In the case of Non- linear loads, they involve AC loads and current is not proportional to the voltage. These loads generate harmonics that distort voltage or cause pulsating current e.g., laser printers, computers, electric ballast and refrigerator.

Linear Load

Fig. 3.13., shows a Linear load 1 Simulink block. It is a three-phase balanced load, made up of a combination of RLC elements. The load always has a constant impedance at a specified frequency. It is significant to note, active and reactive power consumed by the load are proportional to the square of the voltage.

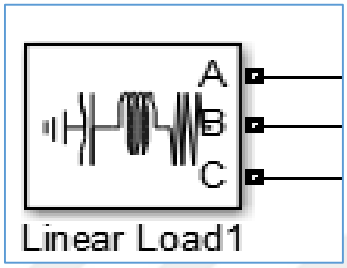

Figure 3.13: Three Phase RLC Linear Block.

Three Phase Non-linear Load System

Harmonics are inevitable in power distribution systems especially when non-linear loads are modeled as industrial or domestic loads, Fig. 3.14., shows a non-linear load Simulink block designed for the VPP system. They can be fatal to the systems coupled in the VPP platform and may cause distortion of voltage and current waveforms, resulting in power losses and degradation of power quality. In most cases, electric equipment is damaged. Fig. 3.15., shows a Total Harmonic Distortion measurement Simulink block.

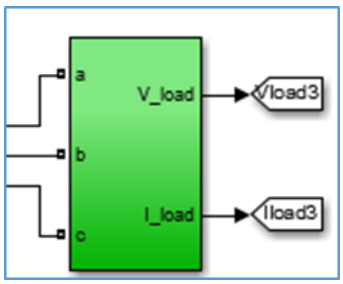

Figure 3.14: Three Phase Non-Linear Load simulink Block.

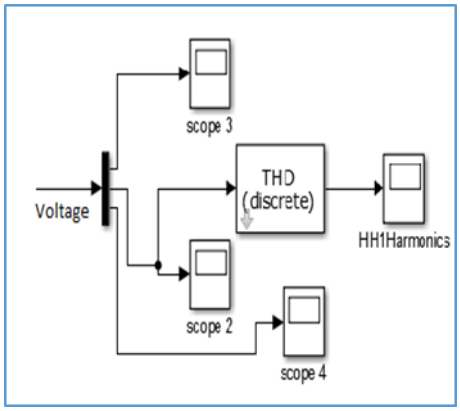

Figure 3.15: THD simulink block.

3.3.3. Neutral Block

Fig. 3.16., shows a Neutral simulink block. It implements a common node that has a specified node, the block can be used to create a floating neutral or to connect two points at a distance without drawing a line. A neutral line or wire supports three-phase to use higher voltage, at the same time it supports a single phase that is dominant with lower voltage. Linear loads are mostly used in some sections of the power distribution system because of the high voltage scenario. Linear loads or balanced loads phase currents tend to cancel each other and their summation is zero, making it possible to avoid usage of neutral block at some lines.

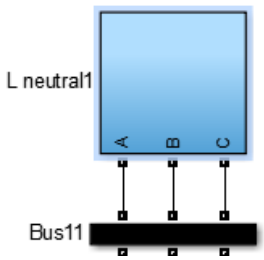

Figure 3.16: Neutral Simulink Block.

3.3.4. Three-Phase Shunt Active Power Filter

An Active power filter is a device that generates the same amount of harmonics as generated by the load when shifted 180° phase. When the harmonics are introduced at

the point of common coupling, the harmonic currents from the load are eliminated and the grid supply is made sinusoidal. [27] There are two types of active filters; Series active filters and shunt active filters. Fig. 3.17., shows a shunt active power filter which compensates load current harmonics, by inserting equal and opposite harmonic compensating current. Fig. 3.18., shows Shunt APF simulink block.

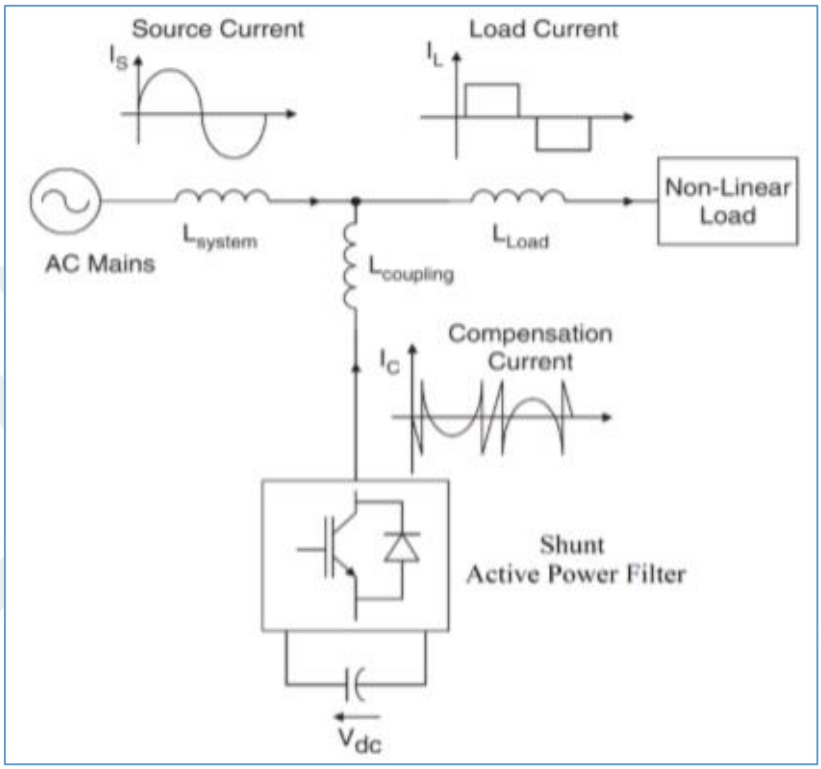

Figure 3.17 Basic Scheme of Shunt Active Power Filter [27]

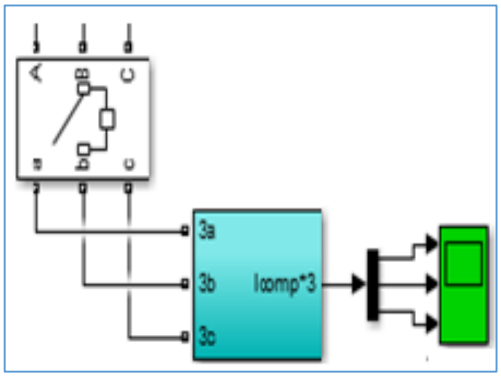

Figure 3.18: Shunt Active Power Filter Simulink Block.

3.3.5. Voltage Boost Converter

A boost converter is a system that increases the output voltage from DERs. The solar model output voltage is boosted to a higher value resulting in the increase of DC output from the photovoltaic. It consists of an inductor, diode, Mosfet, signal generator, resistor and capacitor. Fig. 3.19., shows a DC Voltage Boost Converter.

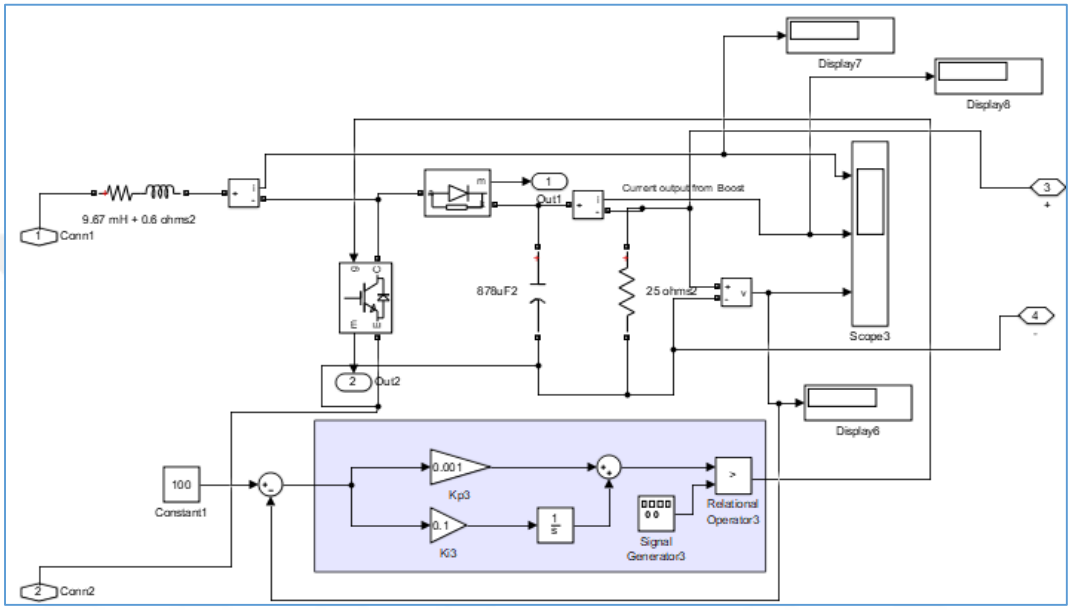

Figure 3.19: DC Voltage Boost Converter.

3.4 Measurement Unit (Data Acquisition)

Fig. 3.20., shows positive sequence and phasor simulink blocks, they obtain active and reactive power from the calculation of the three-phase V-I measurements, also obtained from buses as peak values. T-values stand for different addresses of VPP components and can represent parameters such as voltage, frequency, current, active and reactive power. The From Blocks shown represent status acquisition and feeds it into scope for display, they can also be represented using mat files. Fig. 3.21.,depicts scopes representing active power, state of charge and total harmonic distortion.

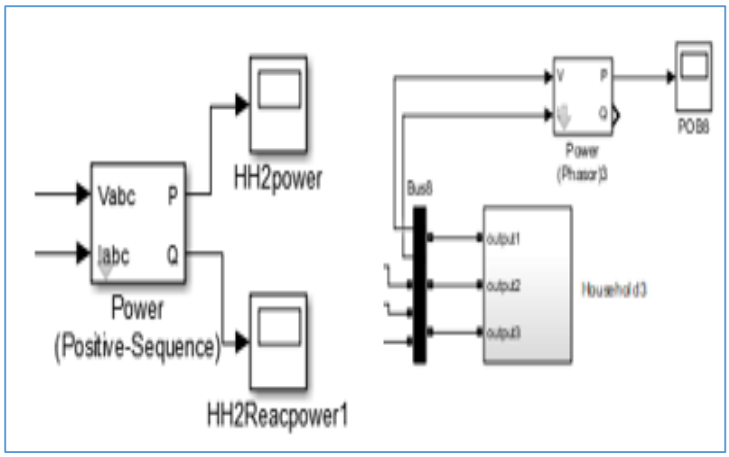

Figure 3.20: Positive Sequence and Power Phasor measurement units.

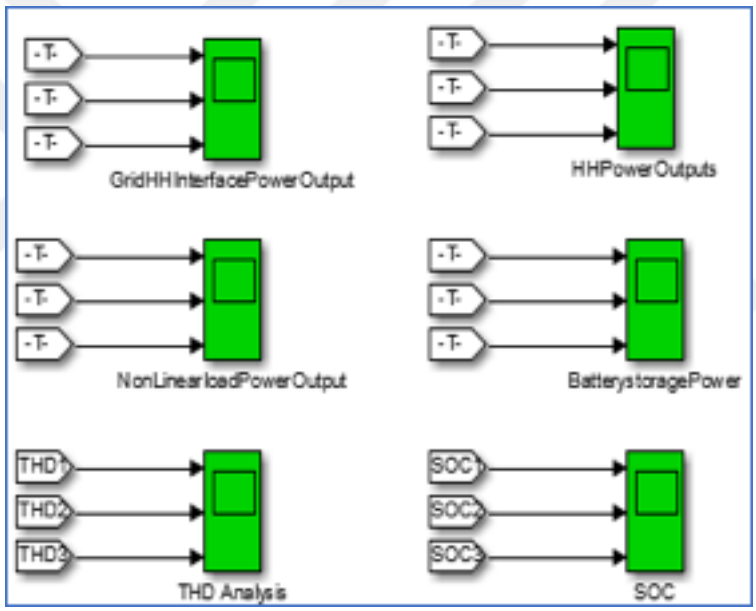

Figure 3.21: Data Measurement Scopes.

Three Phase V-I Measurement Unit

Fig. 3.22., shows a three-phase V-I measurement unit. It instantaneously measures three-phase voltage and current in a circuit. If linked with the three-phase elements, it will return the three-phase to ground or phase to phase peak voltages and currents. When the phase to the ground is measured per unit, the block changes the obtained voltage values in reference to the peak value of nominal phase to ground voltage.

If current per unit is measured, the block converts the measured value based on the peak value of the nominal current. Fig. 3.23., shows a three-phase V-I APF measurement block.

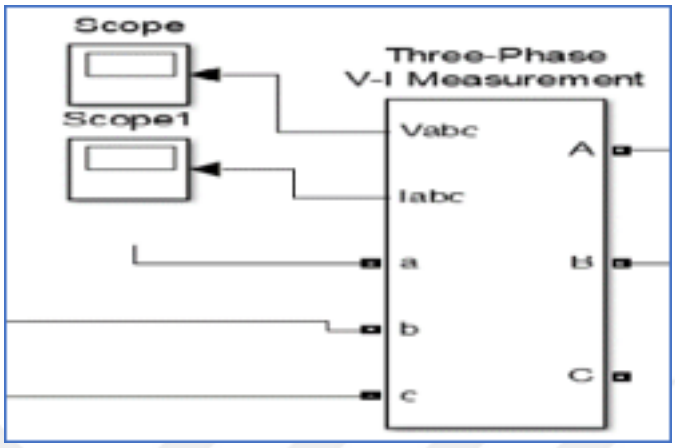

Figure 3.22: Three -Phase Measurement block.

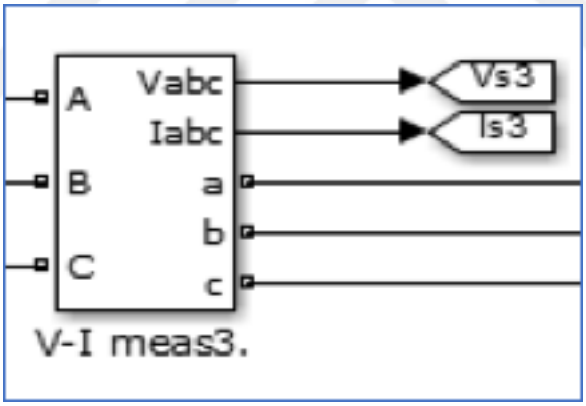

Figure 3.23 Shunt APF Three -Phase V-I Measurement block

CHAPTER 4

Results and Discussion

The fundamental aim of the study is to explore the complexity of the VPP energy platform and putting it into use, by integrating RES into the transmission power system. The model developed is to assess power variations across the generational units (Rooftop PV systems), Energy Storage Unit and the Load system. The generational units are termed as household units representing a locality.

The grid model developed is evident in the existence of multi-rooftops PVs, whereby distributed energy sources are becoming more common as mentioned in the Turkey PV systems case study. Communication between different generational units termed as households is out of scope of this thesis. Matlab Simulink is used to simulate the VPP model for 0.2 seconds sufficient for this study.

4.1 Simulation of VPP System

As mentioned in Fig. 3.2., run-time control scheme is a preferred methodology used to manage power demand, by creating an automatic resource dispatch to keep up with base and peak power demand by the load. This technique is illustrated in Fig. 4.1..

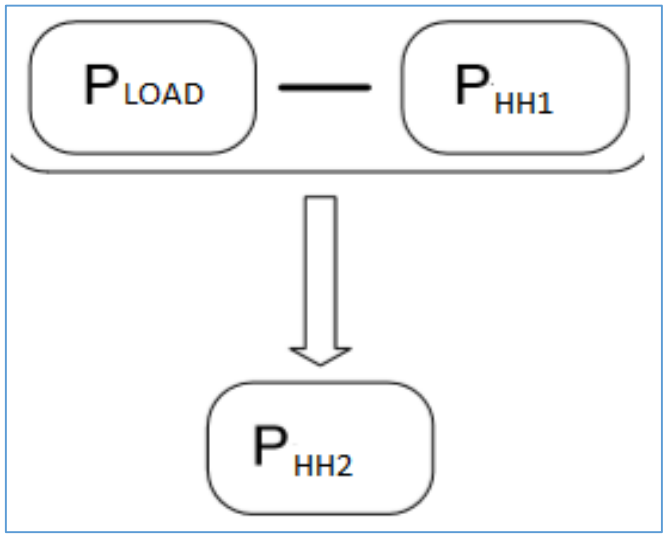

Figure 4.1: Illustration of Run time Control Scheme.

The run-time control method uses raw data from measurement devices. The difference between active generation of HH1(Rooftop PV1) and active consumption of the load, is relayed to HH2 (Rooftop PV2) as a command signal. Therefore, the output of HH2 is deemed to compensate for the shortage of power in HH1. Due to the stochastic nature of the PV system, the rest of the power can be supplied by the transmission grid.

4.2 Grid on and off Analysis

The Grid is switched on and off to monitor the variation of power for HH1, HH2 and HH3 both at 600W/m^2, then the Grid system is switched on and off at Standard Test Conditions (STC) 1000W/m^2 and 25˚C respectively. Fig. 4.2., shows three-phase power curves, between 0 and 0.02 initialization of block parameters takes place and the grid power increases with simulation time injecting approximately 4.5kW or 4500W into the VPP system. After 0.02 the amount of power injected slightly decreases from about 5.4kW to 4.5kW indicating power being consumed by RLC loads and the DERs. When the grid is switched off there is no power injected and the grid relies on power exportation from the DERs.

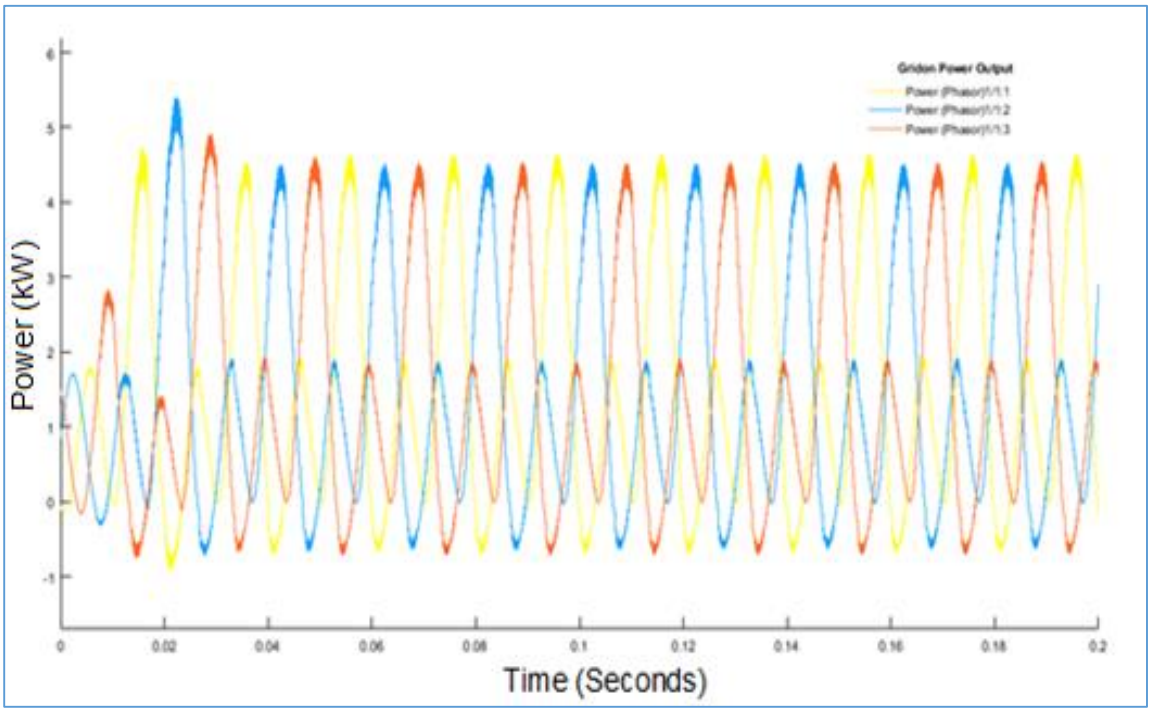

Figure 4.2: Grid Power Representation (Grid on).

Under STC unlike Fig. 4.2., there is a constant power supply of about 1.5kW between Time 0 and 0.02. Then the power injected from the Transmission system rises steadily from 1.5kW to 5kW and drops to gain an approximately constant value of 4.7kW as shown in Fig. 4.3..

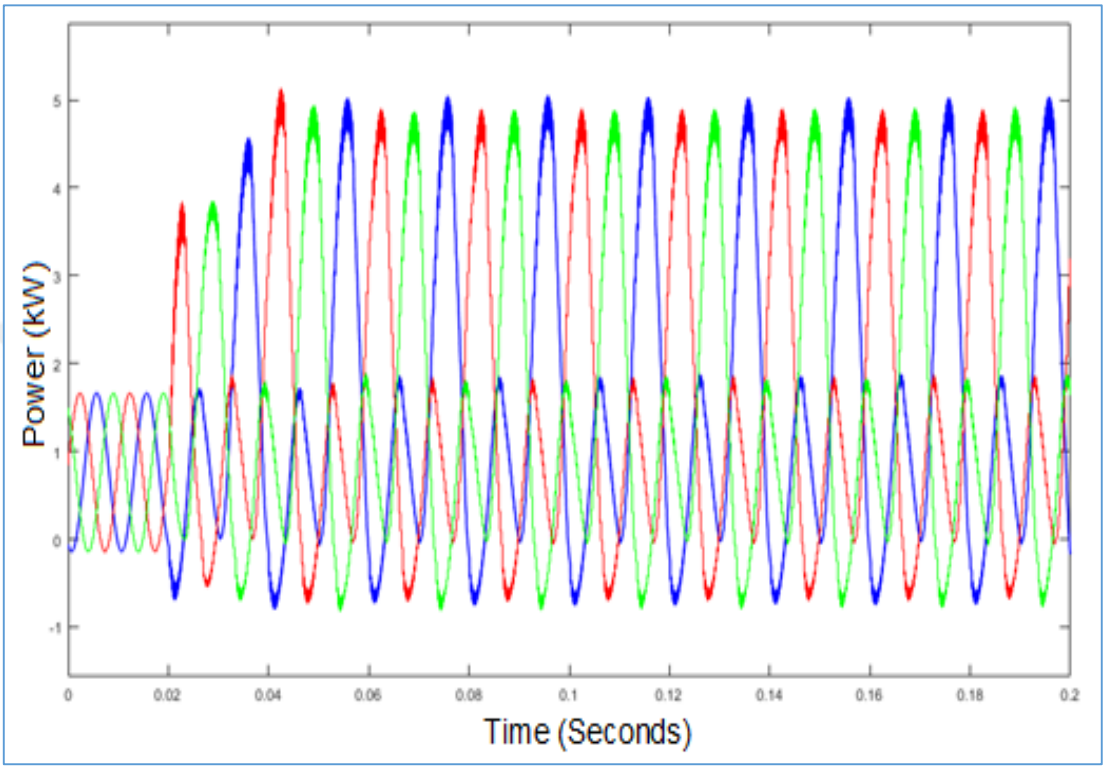

Figure 4.3: Grid Power at STC (Grid On)

4.2.1 Power Generation (Grid on/off)

Fig. 4.4., shows a DER and Battery power combined production they continuously supply power to the load and the grid. Battery and PV array combination produces about 5.604kW for Household1 which decreases to 0.6kW, and later slightly increases to 0.7kW as shown in Fig. D.1., Household2 and Battery combination generates 5.641kW as a maximum value and steadily decreases to 0.9kW, and later the power profile rises to 1.398kW. Household3 generates the maximum power of about 9.4kW, which later falls to the lowest value of the three Households of about 0.3kW.

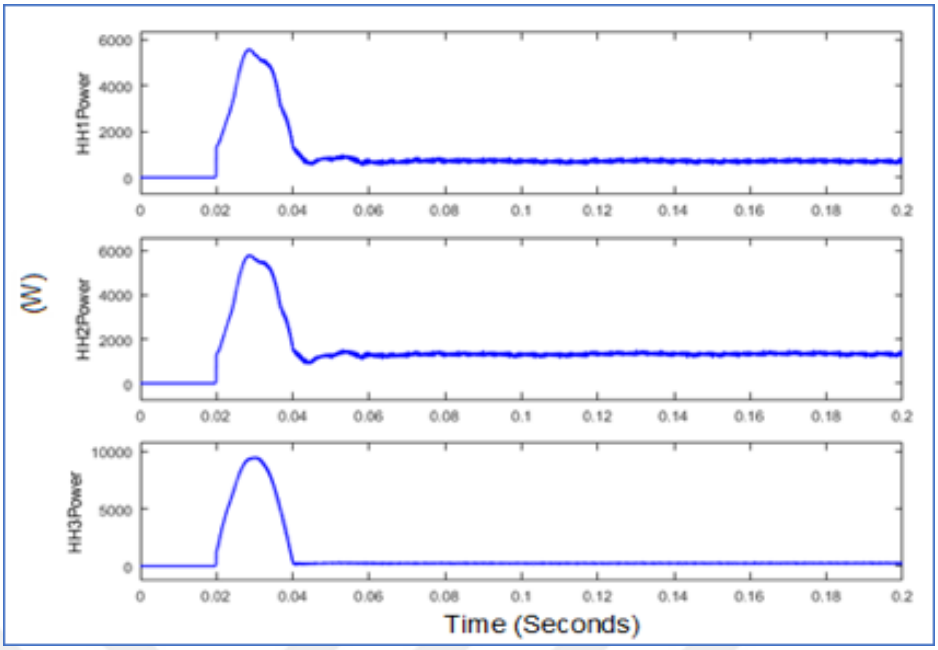

Figure 4.4: Households Power at 600W/m^2 (Grid on).

Fig. 4.5., shows a Grid off scenario. The amount of power supplied falls almost by half in household1 and household2.

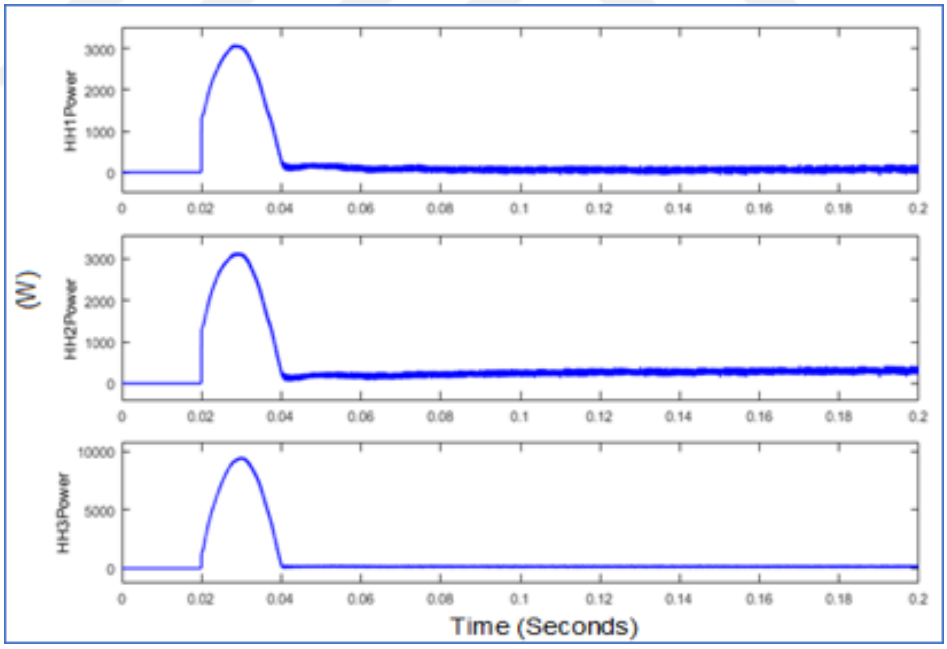

Figure 4.5: Households Power at 600W/m^2 (Grid off).

Implying there is less power in the grid and power has to be exported by the households into the grid. Between Time 0.02 and 0.04 there is a significant amount of power generated by the households. HH1 and HH2 generate a similar amount of power of

about 3kW and as per Fig. D.2., HH1 settles to a low energy profile compared to HH2. HH3 generates a large amount of power at an instant of about 9kW this amount decreases up to 0.26kW and keeps on varying within the range of 0.2665kW and 0.168kW.

4.2.2 Power Generation at STC (Grid on/off)

When the testing conditions change the power generated also changes and the generation curves for the households are distinct from each other. Grid determines the production range of the Households. When the Grid is on, a large amount of power is withheld within the battery storage system and later injected into the grid, when there is power deficit Fig. 4.6., shows generation power profiles of the Households. HH1 and HH2 generate 0.76kW and 0.79kW respectively.

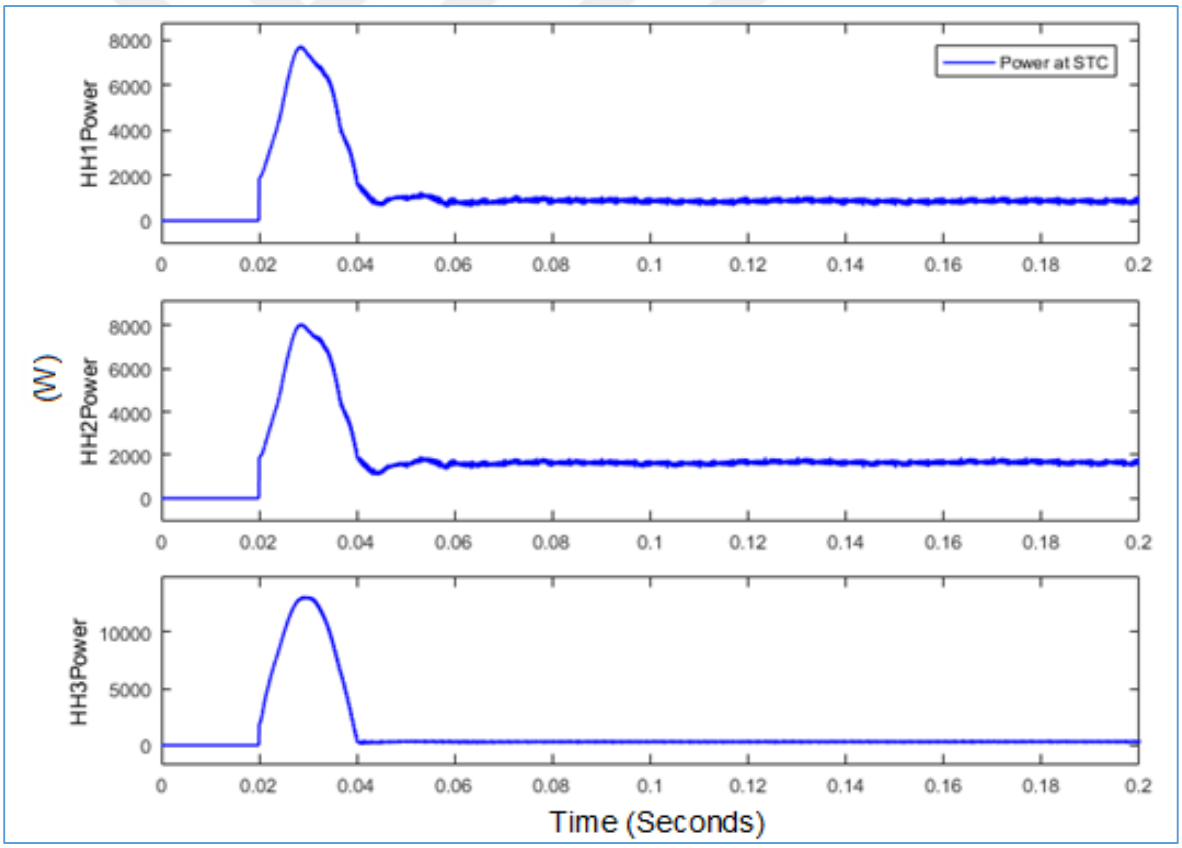

Figure 4.6: Households Power at STC (Grid on).

The power profile in HH1 varies between 0.990kW and 1.597kW as indicated in Fig. D.3., while HH2 increases steadily from 1.324kW to about 1.8kW as shown in Fig. 4.6.,

and Fig. D.3.. HH3 drops drastically from 13.4kW to a minimum of 0.3kW and slightly increases within the range of 0.3kW to 0.4kW as indicate by data tip in Appendix D. When the Transmission system is off, half the power supplied is fed into the grid from the HH1 and HH2 as shown in Fig. 4.7., the amount of power generated is cut by almost half at STC for HH1 and HH2.

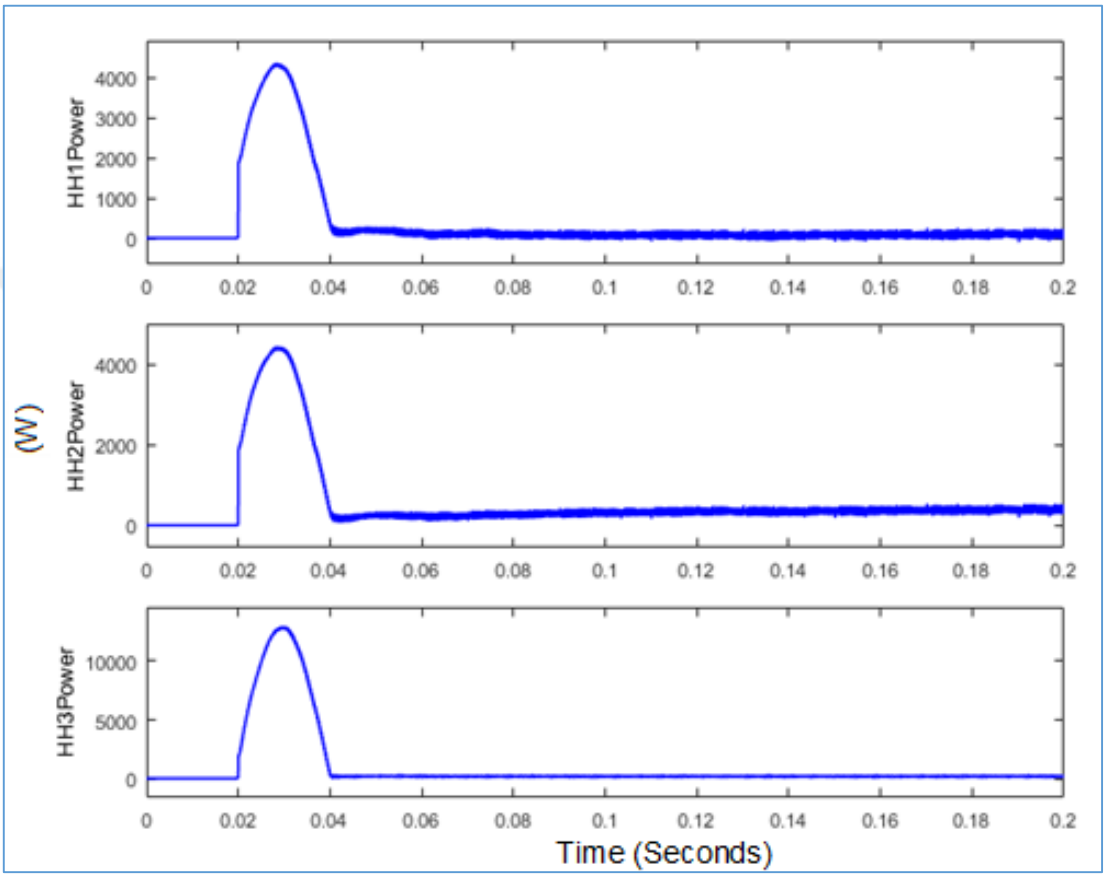

Figure 4.7: Households Power at STC (Grid off).

Fig. D.4., data tip at STC for Households, shows HH1 has a maximum value of 4.361kW and decreases to 0.239kW, this value varies in the range of 0.100kW-0.200kW, while HH2 has a maximum value of 4.461kW that falls to 0.16kW and then gains a steady supply of about 0.5kW.

4.2.3 Grid Household Interface Power (Grid on/off)

The grid is connected to each household by a switch that opens every 0.02 seconds. They form an interface regarded as a point of common coupling. At this point, three-

phase power is considered and for HH1 there is a maximum of 0.5kW as shown in Fig. 4.8.. HH2 and the grid, there is approximately 50kW power build-up at the interface. Meanwhile, HH3 has the greatest power build-up of about 100kW, confirming why HH3 power profile shown in Fig. D.1., decreases steadily as a result of exporting more power to the grid.

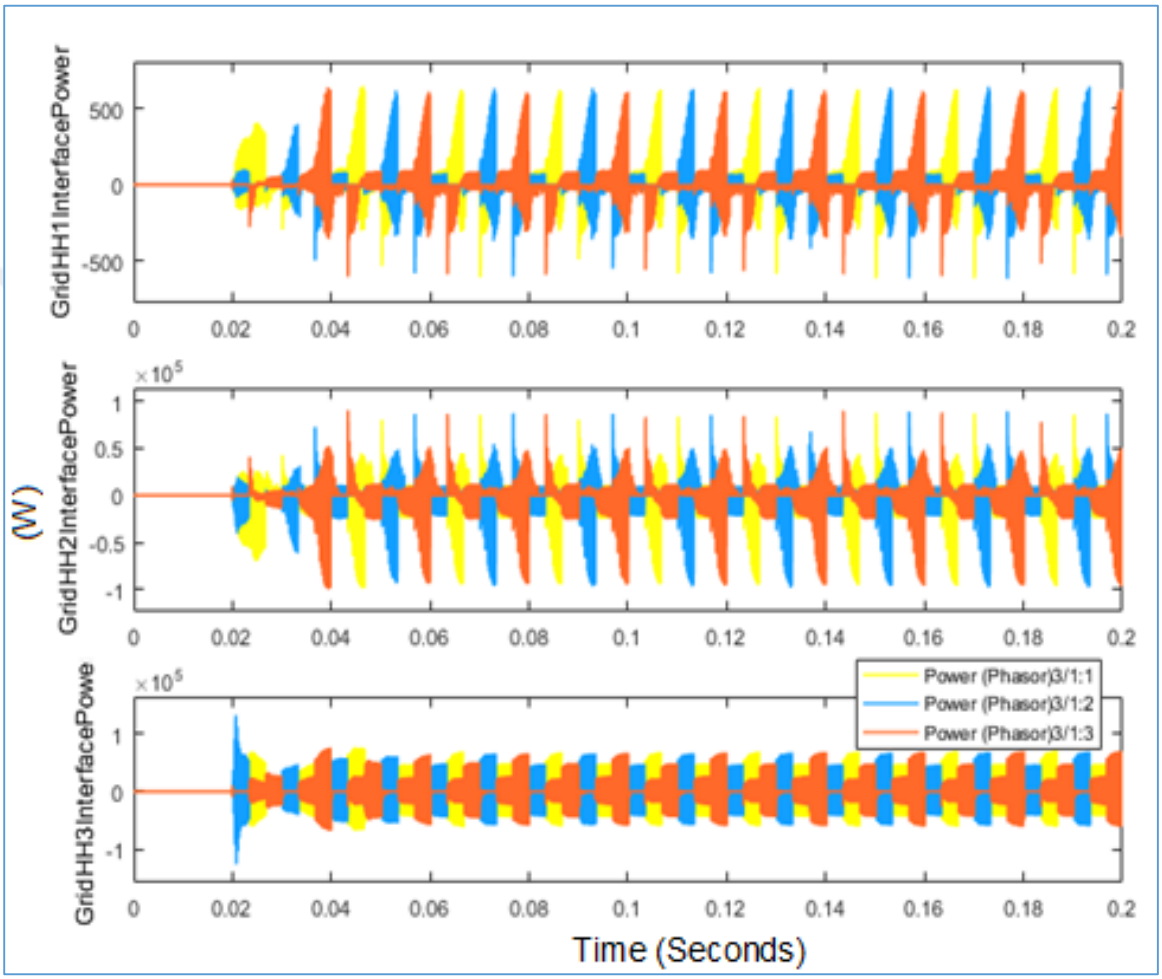

Figure 4.8: Power at Point of Common Coupling (Grid on).

When the Transmission System or the grid is switched off. Power at the interface between HH1 and the grid reduces by more than half as shown in Fig. 4.9.. Power at time 0.02 and 0.04 is less than 0.2kW and starts to increase steadily from time 0.1. Indicating a significant drop of power as depicted in Fig. D.2., suggesting a power exportation scenario. HH2 and HH3 export a significant amount of power to the grid,

to cater for the deficit created. At the interface 2, there is a 20kW of power that later drops to approximately 10kW.

At Time 0.02 there is a 100kW power build-up at the interface between HH3 and the grid which later falls to 50kW, this amount can also be a contribution from other interfaces but a significant amount is given off by HH3 as shown in Fig. 4.9.. Grid3HHInterfacePower.

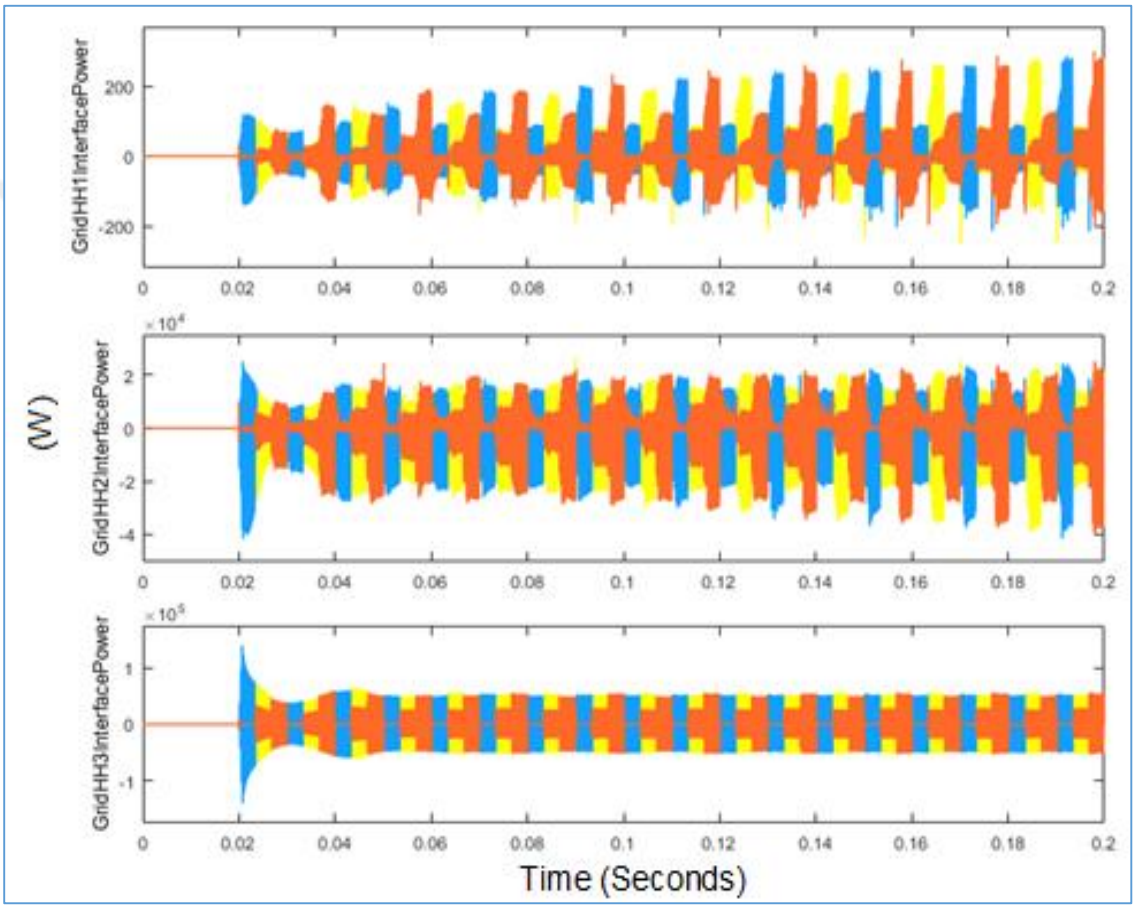

Figure 4.9: Power at Point of Common Coupling (Grid off).

4.2.4 Grid Household Interface Power at STC (Grid on/off)

When the testing conditions change power at the interface increases. HH1Interfaec has more than 0.5kW power while HH2interface 100kW. HH3Interface power is the highest power build-up at time 0.02 and later drops to 100kW as shown in Fig. 4.10..

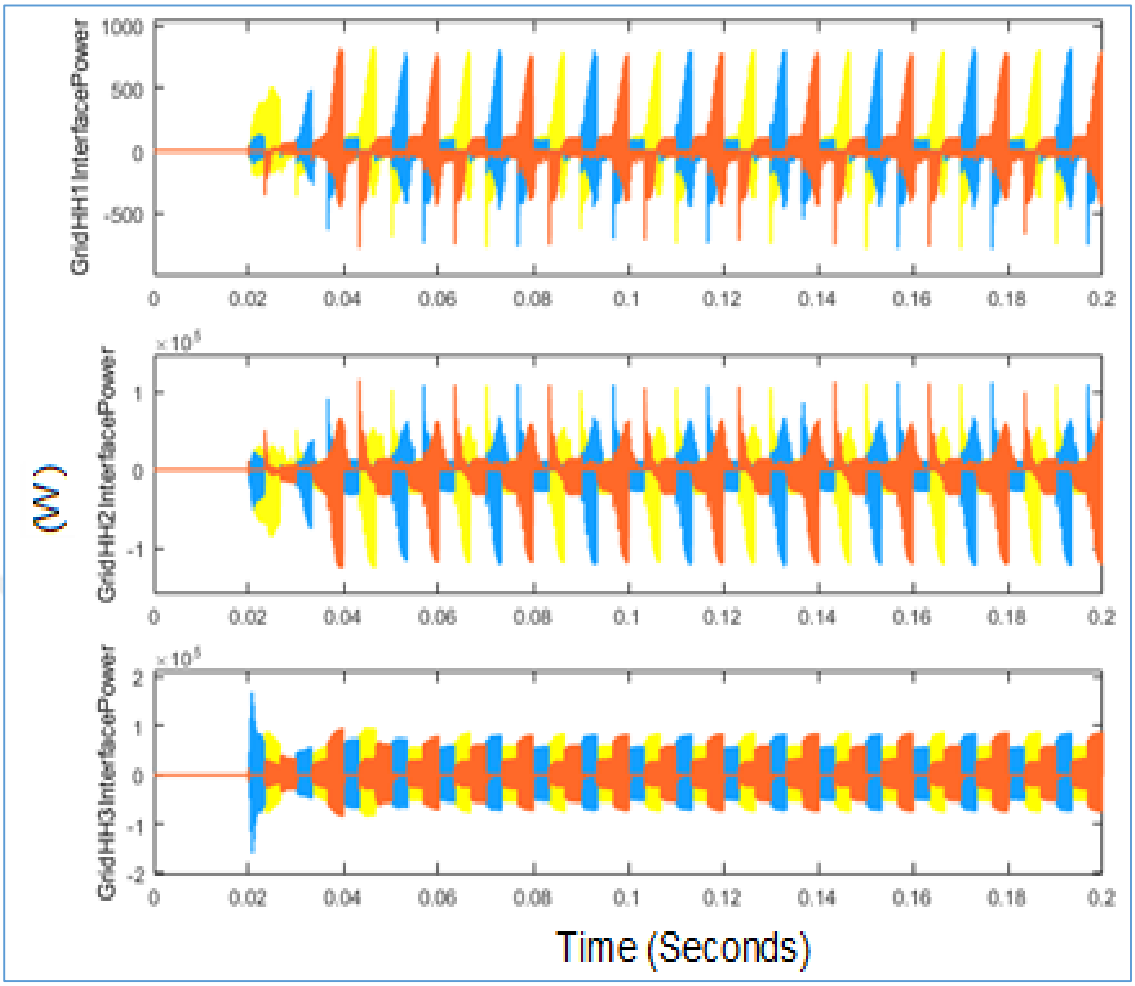

Figure 4.10: Power at Point of Common Coupling at STC (Grid on).

The power dynamics keep on changing under different scenarios. GridHH1Interface power steadily increases with simulation time from 0.14kW to more than 0.2kW as shown in Fig. 4.11.. GridHH2Interface power slightly increases but less than the power in Fig. 4.10., implying importation of power into the grid system.

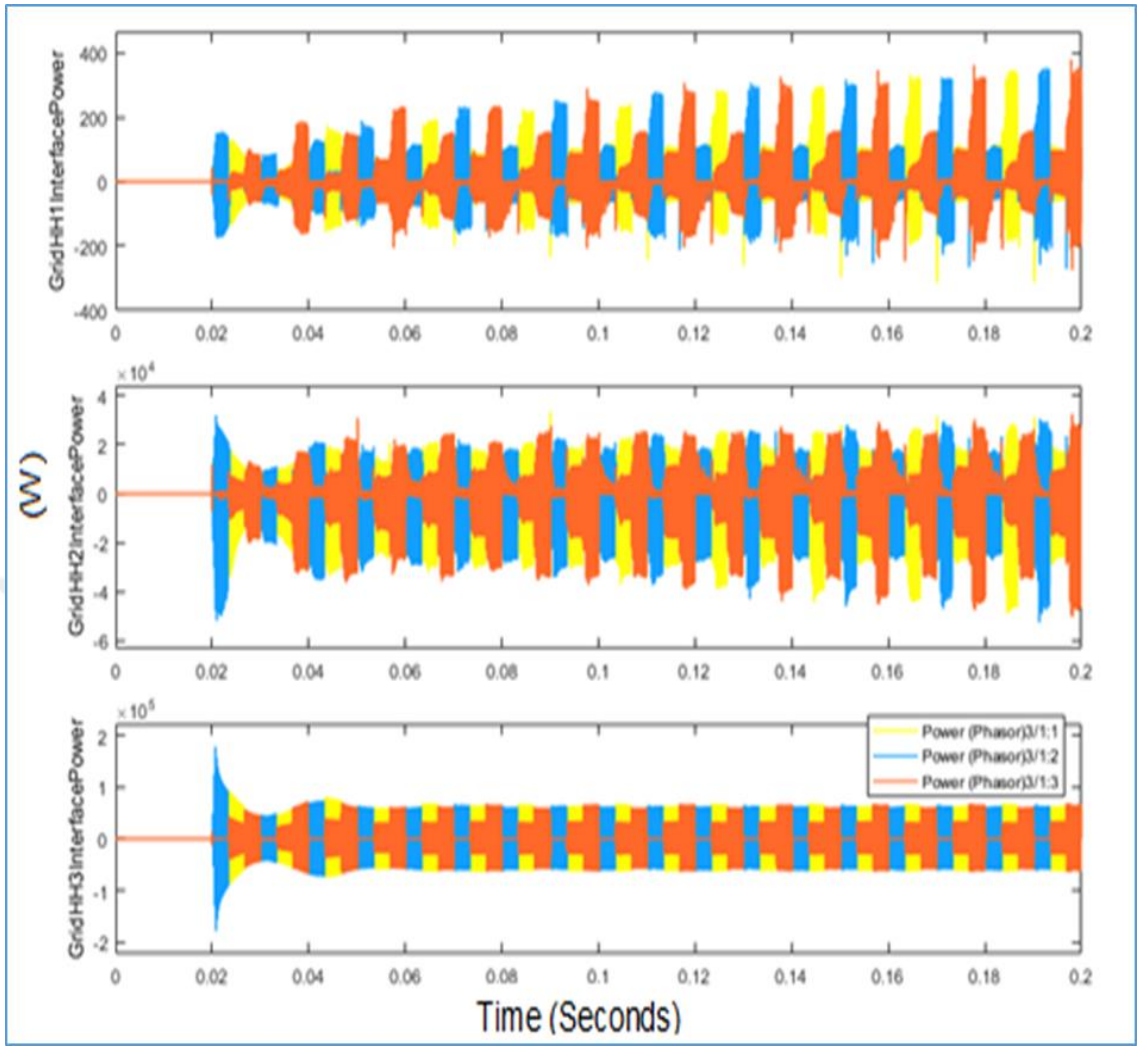

Figure 4.11: Power at Point of Common Coupling at STC (Grid off).

GridHH3Interface power has a smooth power profile that varies within an undetectable small range after time 0.04 compared to Fig. 4.10., and varies significantly with simulation time.

4.3 Storage System Analysis

It is expected that the storage system should maintain the power balance within the VPP system. Grid power imbalances are very common, that is why PV power varies widely from the nominal and causing load variation too. When Irradiance changes there is always a change in the power output of the battery. The battery status is identified by SOC, current and voltage situations as shown in Fig. 4.12..

The battery used in this experiment is Lithium-ion phosphate, with a resting state of charge at 100% and a storage capacity of 4kWh. When the grid is on and at Standard Testing Conditions, the current varies sinusoidally with simulation time and a steady power output of about 2.3kW is dissipated into the VPP system, supplementing the Power from the Rooftop PV.

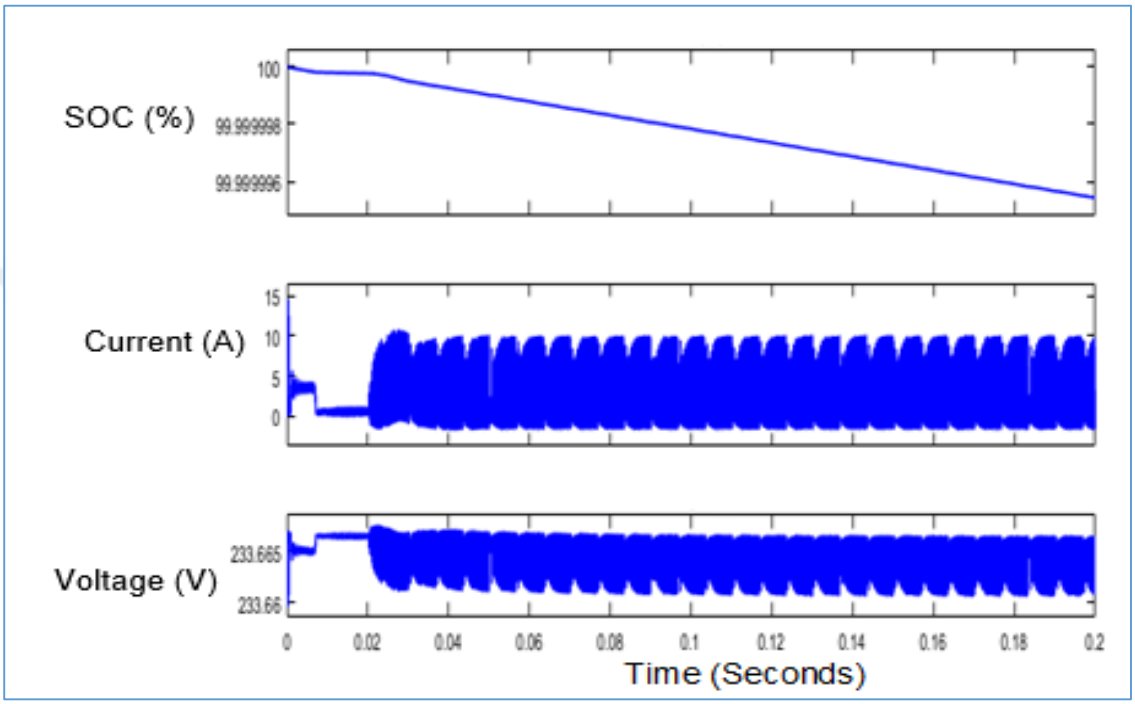

Figure 4.12: Household1 Energy Storage (Grid on/STC).

Power is also obtained from the Grid transmission system when it is on, signifying a significant amount of power is withheld in the battery during the grid-on process, as indicated by the voltage and current situation in Fig. 4.13..

After the Grid Transmission System is switched off the battery supplies power to supplement the incoming power from the PV array Fig. 4.14., and Fig.4.15., both indicate a steady and an increasing amount of current with a decreasing voltage amplitude. The excess current finds its way into the grid network after power being fed to the load. Household3 as shown in Fig. 4.16., has the most current compared to the other two households, it retains most of its power in the battery due to power saturation at its interface with the grid, explaining power build-up at the interface and high instant power from household3.

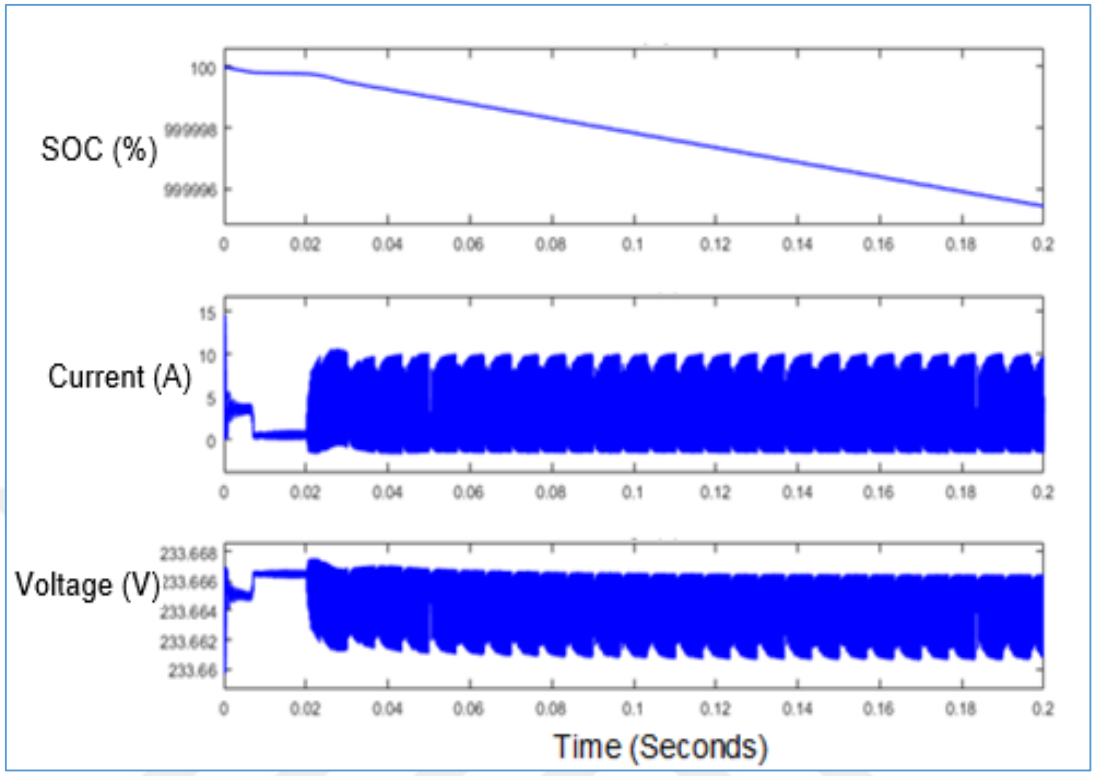

Figure 4.13: Household2 Energy Storage (Grid on/STC).

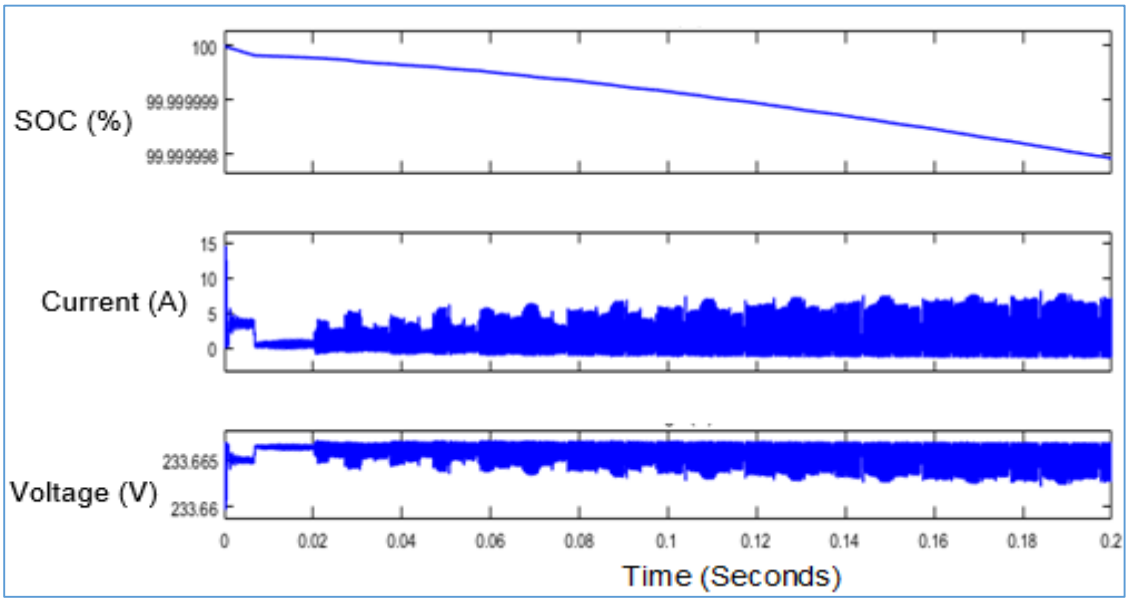

Figure 4.14: Household1 Energy Storage (Grid off/STC).

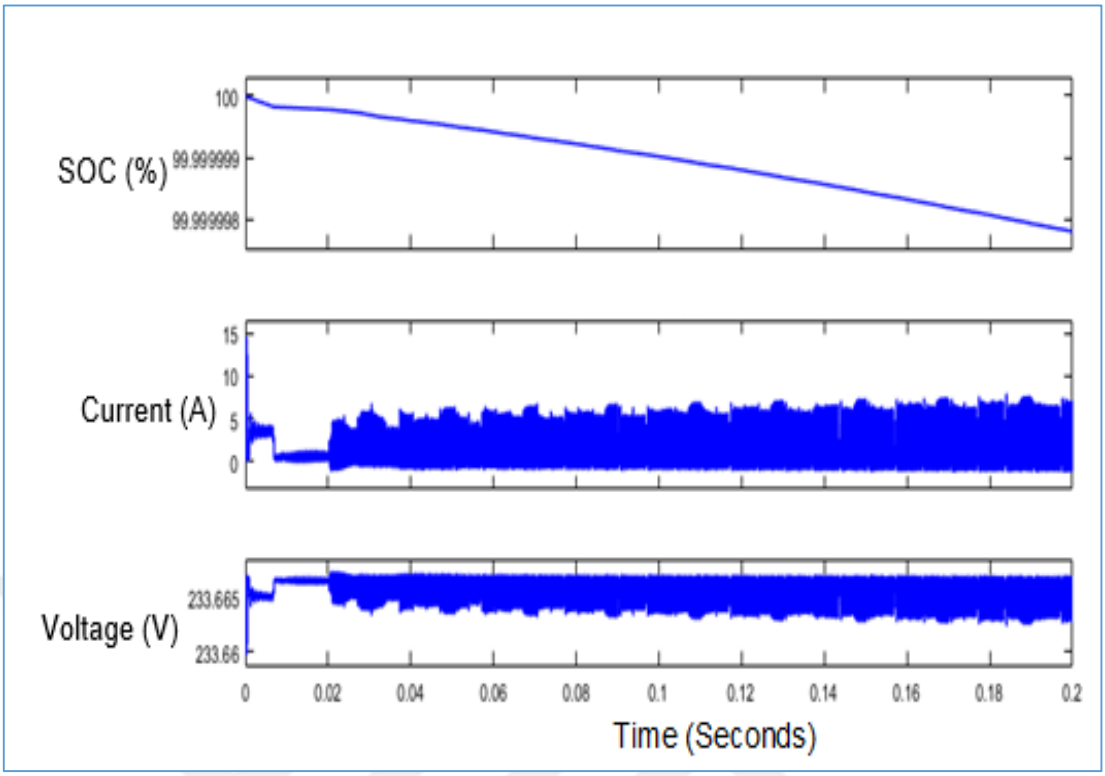

Figure 4.15 Household2 Energy Storage (Grid off/STC)

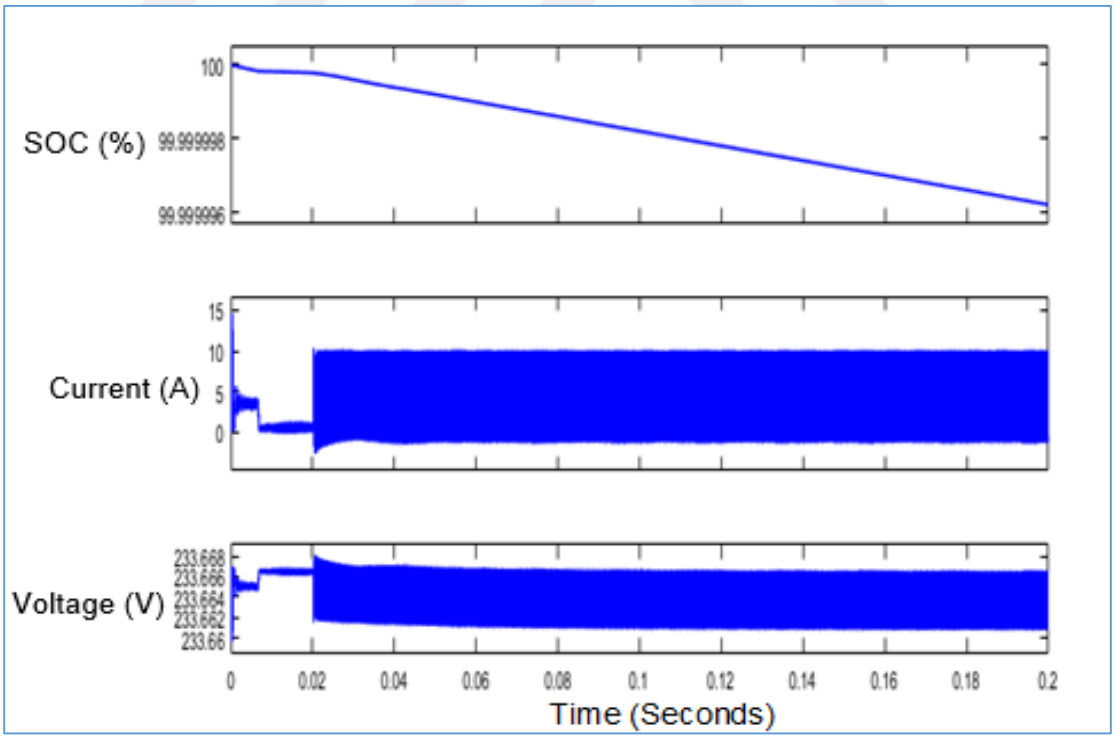

Figure 4.16: Household3 Energy Storage (Grid on/off/STC).

4.4 Non-linear Load Analysis

Non-linear loads have harmonics that create voltage or current surge, which can lead to power loss in the system. The load power consumption profile is dependent on generated power. Fig. 4.17., HH1 power drops from 1.382kW to 0.086kW at time 0.04 as illustrated by Fig. D.5.. HH2 has a resembling power profile with HH1 with a difference of 0.045kW at the maximum point. HH3 Power drops to the lowest from 1.372kW to 0.003kW but starts to increase slightly again.

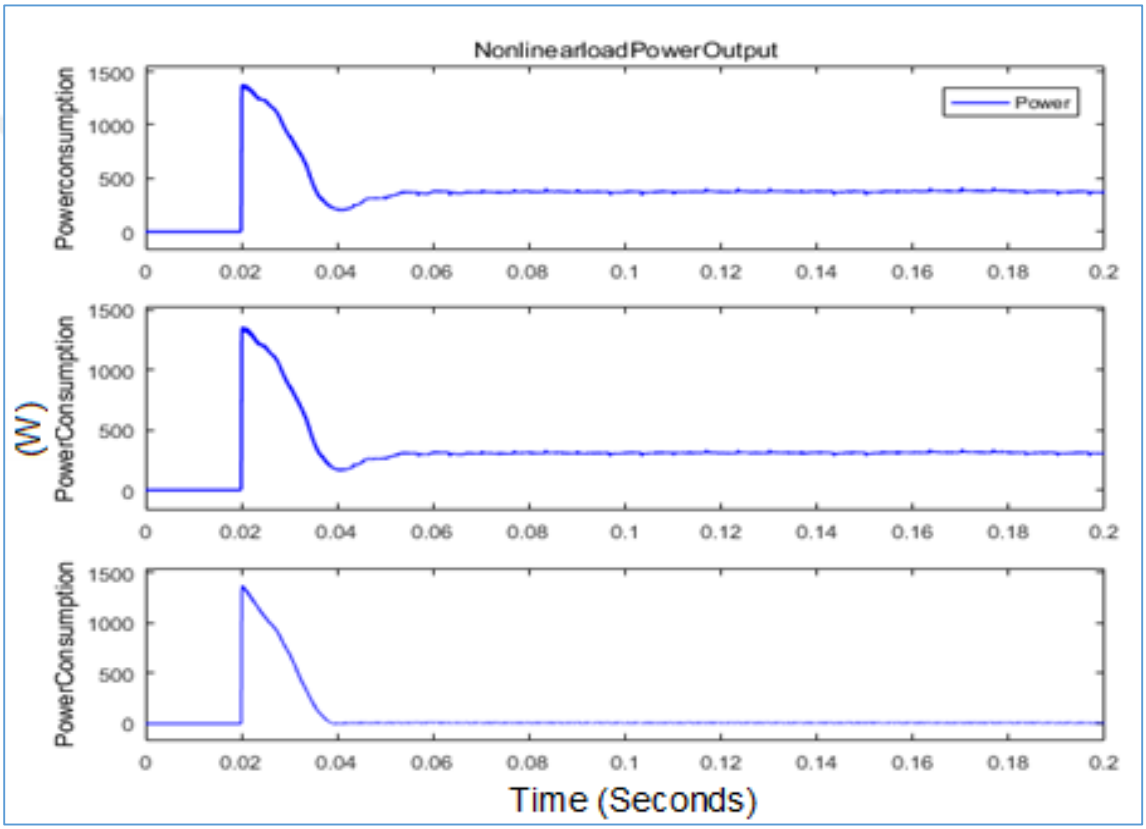

Figure 4.17: Non-Linear load Power (Grid on/off).

At STC power consumption increases up to about 2kW as depicted in Fig. 4.18.. HH1 has 1.912kW of power but drops steadily to 0.259kW at time 0.04, though power starts to increase significantly as shown Fig. D.5.. HH2 instantaneous power falls from 1.940kW to 0.2167kW, this figure increases steadily with simulation time, while HH3 power drops from about 1.922kW to the lowest of the three households that is

0.0060kW as shown as by data tips of Fig. D.6., thereafter power increases but at a slower pace.

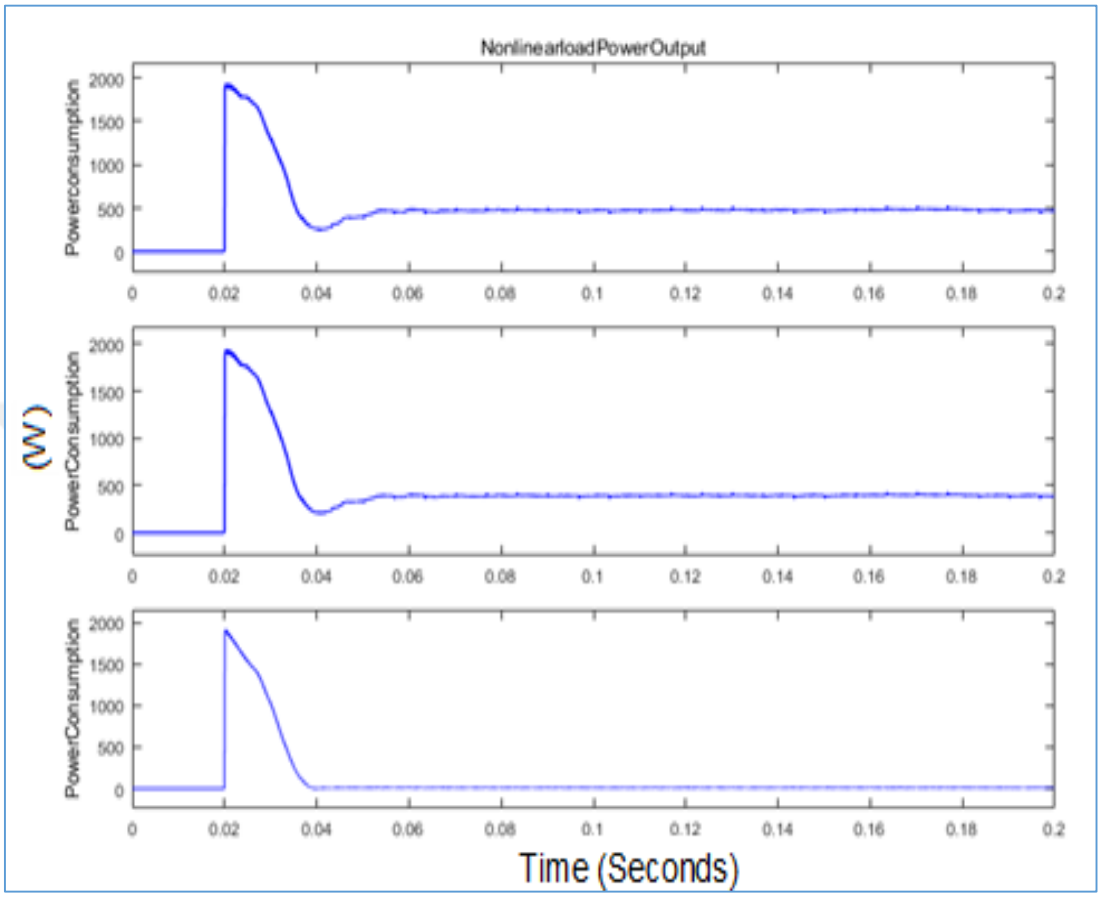

Figure 4.18: Non-Linear load Power at STC (Grid on/off).

Harmonics affect the power profiles of the Households and the load systems attached to the VPP system. THD simulink block is used to measure voltage harmonics Fig. 4.19., denotes the state of harmonics for every household.

THD1 has the least harmonics followed by THD2, household three THD3 is the most affected. At STC when the grid is neither off nor on voltage harmonics increase to a very large extent as shown in Fig. A.5.. In order to assess the impact of harmonics in terms of percentage, FFT analysis is suggested for the non-linear loads. When the grid is on, THD is about 221.63% as shown in Fig. A.2.. And when the grid is off THD is about 228.17% as indicated in Fig. A.7.. When at STC and the grid is on non-linear load THD is 208.71% signifying harmonics reduction as shown in Fig. A.4.. HH1Power

Interface at STC when the grid on THD is about 696.7% shown in Fig. A.3., and when the grid is off at the same condition THD is about 3204.6% shown in Fig. A.6.. Implying distribution of power imbalances into the grid when RES are grid-tied.

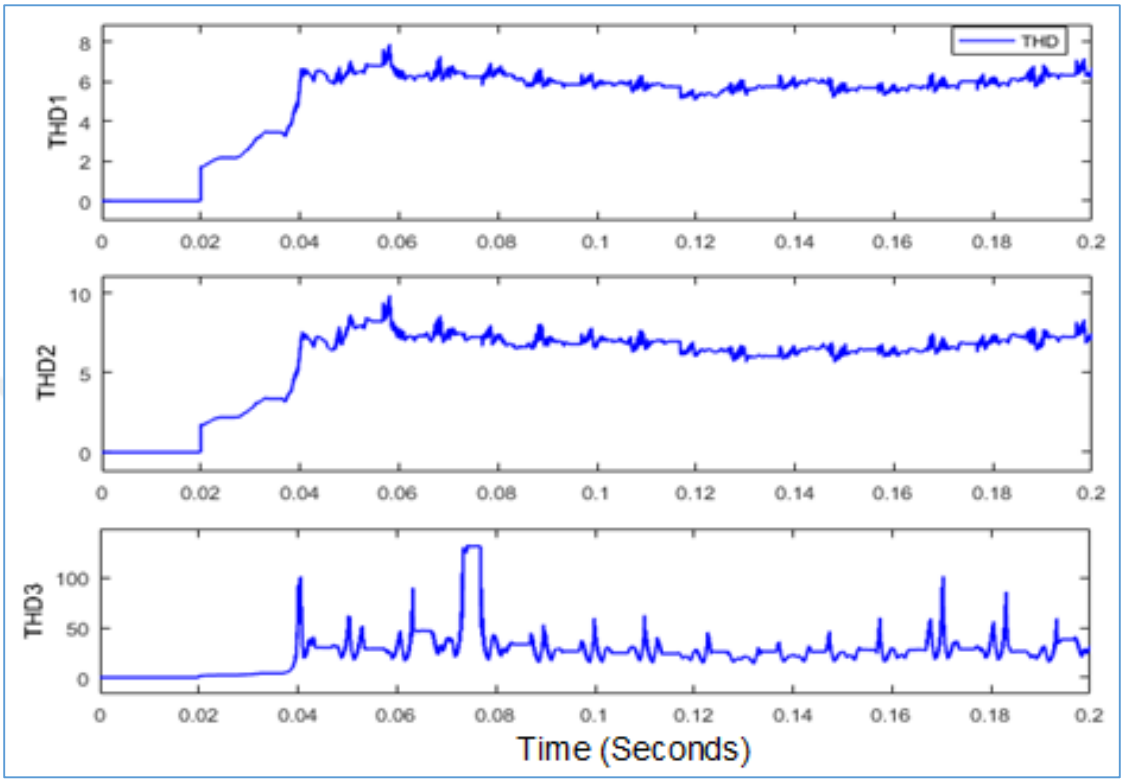

Figure 4.19 THD Input Signal (Grid on/off).

CHAPTER 5
CONCLUSION

5.1 Summary of findings

The integration of the PV arrays and the batteries to the utility grid has been simulated with the help of Matlab/Simulink, using Simscape power systems toolbox as indicated in Fig. 3.3.. The model composed of three PV arrays that are linked to boost converters and battery sets that are coupled with DC/DC converters, three-phase DC/AC inverters also connected to non-linear loads and finally to the PCC, which is linked to the utility grid as shown in Fig. B.1.. The PV array is a solar unit [28] which is a fixed PV array, it consists of 12 modules per string that are connected in series and 2 strings that are in parallel. There are 24 modules per array, each 285W solar panel has 72 PV cells. The state of the battery is initialized at 100% charge capacity. Two cases are considered, the three-6840W PV arrays operate at 600W/m^2 and 1000W/m^2 irradiations.

Table 5.1, outlines both cases with a consumption capacity of the non-linear loads, load 3 consumption increases at STC to about 1.922kW, and at 600W/m^2 is about 1.371kW. Rooftop PV3 represented as HH3 has maximum instantaneous power at time 0.03 ranging from 9.0kW to 12.0kW for both cases. Harmonics distort voltage and lead to power imbalances in the grid as illustrated in Appendix A. When power generated is less harmonics are also less.

The grid absorbs a lot of harmonics when it is on compared to when it is off, this is suggested by FFT analysis. Fig. 4.19., at 600W/m^2 total harmonic distortion, is less in the households, unlike Fig. A.5., which is at STC total harmonic distortion fort he households increases, evidence for low subsequent power output and load consumption for household 3 respectively. Current from the batteries is positive, this is supplied into the grid most of the time unlike battery 3 in Fig. 4.16., which is in excess amount and with the highest instantaneous power. Battery 3 retains most of its power because its saturated with power at the interface and this causes power imbalances in the grid network.

Fig. 4.2.. and Fig. 4.3., show power output from the grid at initial stages caused by islanding effects that mostly occurs when PV panels are connected to the grid. This is a common phenomenon that can lead to abnormal voltages and frequencies[29].

Table 5.1 VPP Platform DERs and Load Active Power

VPP Component & Time		**Instant Power at 0.6kW/m^2 (kW)**		**Instant Power at 1kW/m^2 (kW)**	
Households	**Seconds**	**Grid on**	**Grid off**	**Grid on**	**Grid off**
HH1	**0.03**	**5.562**	**3.072**	**7.6**	**4.361**
HH2	**0.03**	**5.782**	**3.0**	**7.984**	**4.461**
HH3	**0.03**	**9.0**	**9.4**	**12.4**	**12.0**
Load1	**0.02**	**1.375**	**1.382**	**1.912**	**1.934**
Load2	**0.02**	**1.348**	**1.337**	**1.940**	**1.928**
Load3	**0.02**	**1.371**	**1.372**	**1.922**	**1.923**

Virtual Power Plant System for Rooftop power management was developed, three PV arrays, three storage systems and three non-linear load systems have been implemented through Matlab simulink. Power output analysis has also been carried out.

The importance of RES integration into the grid network is a prerequisite so as to ensure the security of electricity supply, cost-effectiveness, flexibility and reduction of carbon emissions that end up causing climate change.

Unlike the conventional grid system, the VPP platform can enable consumers to participate and trade power with the utility power service providers. This can easily change how electric energy is viewed by most consumers, already countries such as Sweden, Germany and Belgium have implemented VPP platforms for energy sharing and trading. VPP projects can also alleviate poverty especially in developing countries such as some remote parts of Africa and Asia, which are not connected to national grids.

5.2 Future Work

The next step is Power forecasting using ANN (Artificial Neural Network) and other artificial intelligence methodologies. Further research is to model a simple VPP controller for DERs. The model developed can be used to study dispatch algorithms for VPP to operate in Hardware in the Loop Simulations (HLS).

REFERENCES

[1] O. N. Onsomu and B. Yeşilata, "Virtual Power Plant Application for Rooftop Photovoltaic Systems," 2019 3rd International Symposium on Multidisciplinary Studies and Innovative Technologies (ISMSIT), Ankara, Turkey, 2019, pp. 1-5, doi: 10.1109/ISMSIT.2019.8932895.

[2] B. Owens, "The Rice of Distributed Power", General Electric 2014.

[3] Kakigano H., Nomura M., Ise T., "Loss Evaluation of DC Distribution for Residential Houses Compared with AC System", IEEE, International Power Electronics Conference, Sapporo (JP), 2124, Jun 2010.

[4] Ott L., Böke U., Weiss R., „Energieeffiziente Gleichstromnetze für kommerziell genutzte Gebäude", VDE, Internationaler ETG-Kongress 2013 – Energieversorgung auf dem Weg nach 2050 – Berlin (DE), 5-6 November 2013.

[5] Wolak F. A., "Diagnosing the California Electricity Crisis", Elsevier, The Electricity Journal, Volume 16, Issue 7, August-September 2003, p. 11-37.

[6] History of Wind Energy in Encyclopaedia of Energy Vol. 6, page 426.

[7] IEA (2011), "Harnessing variable renewables: A guide to the balancing challenge" http://www.solarbuzz.com/marketbuzz2010-intro.htm, Available: 10.19.2010.

[8] IEA (2019), *Energy Policies of IEA Countries: Sweden 2019 Review*, IEA, Paris https://www.iea.org/reports/energy-policies-of-iea-countries-sweden-2019-review.

[9] https://arena.gov.au/assets/2017/02/VPP-SA-Public-Milestone-1-Report-Final-for-issue.pdf.

[10] https://arena.gov.au/assets/2017/02/virtual-power-plants-in-south-australia-stage-2-public-report.pdf.

[11] Svenska Kraftnät, Svenska Kraftnät Annual Report 2011. [Online]. Available: http://www.svk.se/PageFiles/41382/SvK_Annual_Report_2009_Spreads.pdf.

[12] World Bank Group, Energy and Extractives Global Practice Group, Europe and Central Asia Region (ECA), Turkey: Rooftop Solar Market Assessment Summary Note, February 2018.

[13] Global Market Outlook 2018-2022, http://www.solarpowereurope.org/global-marketoutlook-2018-2022/, access date: May 01, 2018.

[14] Turkey: Rooftop Solar Market Assessment]. (n.d.). Retrieved from http:// http://documents.worldbank.org/curated/en/532211519629608085/pdf/TR-Rooftop-Solar-Output-P162236.pdf.

[15] E. Mashhour, S. M. Moghaddas-Tafreshi, "Bidding strategy of virtual power plant for participating in energy and spinning reserve marketspart i: Problem formulation", IEEE Transactions on Power Systems, vol. 26, no. 2, pp. 949-956, 2011.

[16] M. Peik-Herfeh, H. Seifi, M. K. Sheikh-El-Eslami, "Two-stage approach for optimal dispatch of distributed energy resources in distribution networks considering virtual power plant concept", International Transactions on Electrical Energy Systems, vol. 24, no. 1, pp. 43-63, 2014.

[17] M. Peik-Herfeh, H. Seifi, M. Sheikh-El-Eslami, "Decision making of a virtual power plant under uncertainties for bidding in a day-ahead market using point estimate method", *International Journal of Electrical Power & Energy Systems*, vol. 44, no. 1, pp. 88-98, 2013.

[18] Q. Zhao, Y. Shen, M. Li, "Control and bidding strategy for virtual power plants with renewable generation and inelastic demand in electricity markets", *IEEE Transactions on Sustainable Energy*, vol. 7, no. 2, pp. 562-575, 2016.

[19] M. Rahimiyan, L. Baringo, "Strategic bidding for a virtual power plant in the day-ahead and real-time markets: A price-taker robust optimization approach", *IEEE Transactions on Power Systems*, vol. 31, no. 4, pp. 2676-2687, 2016.

[20] Y. Wang, X. Ai, Z. Tan, L. Yan, S. Liu, "Interactive dispatch modes and bidding strategy of multiple virtual power plants based on demand response and game theory", *IEEE Transactions on Smart Grid*, vol. 7, no. 1, pp. 510-519, 2016.

[21] Hindawi Mathematical Problems in Engineering Volume 2018, Article ID 3810492, 13 pages https://doi.org/10.1155/2018/3810492.

[22] International Electrical Engineering Journal (IEEJ) Vol. 6 (2015) No.9, pp. 2010-2024 ISSN 2078-2365 http://www.ieejournal.com.

[23] Babaa, S.E., Armstrong, M. and Pickert, V. (2014) Overview of Maximum Power Point Tracking Control Methods for PV Systems. Journal of Power and Energy Engineering, 2, 59-72. http://dx.doi.org/10.4236/jpee.2014.28006.

[24] J. Corera, Virtual power Plant Concept in Electrical Networks, 2nd international conference on Integration of Renewable and Distributed Energy Resources, 2006, Dec 48/Napa/California.

[25] Ove S. Grande, SINTEF ER (17 October 2011), EcoGrid EU - A Prototype for European Smart Grids, Workshop on European Smart Grid projects[online]. Available: http://www.smartgrids.no/attachment.ap?id=31.

[26] EcoGrid EU [Online]. Available: http://www.eu-ecogrid.net.

[27] Shunt Active Power Filter for Power Quality Improvement in Distribution Systems | ISSN: 2321-9939 IJEDR1302005.

[28] Modeling a Grid-Connected PV/Battery Microgrid System with MPPT Controller, Genesis Alvarez-Hadis Moradi-Mathew Smith-Ali Zilouchian - 2017 IEEE 44th Photovoltaic Specialist Conference (PVSC) – 2017.

[29] https://en.wikipedia.org/wiki/Islanding.

[30] Nuutinen P., Kaipia T., Lana A., Silventoinen P., “Start-up of the LVDC Distribution Network, 21st CIRED, International Conference on Electricity Distribution, Frankfurt (DE), 6-9 Jun 2011.

[31] Majumdar, Ankur & Khadem, Md. Shafiuzzaman Khan. (2018). Role of Virtual Power Plants in Capacity Markets. 1-6. 10.1109/EFEA.2018.8617062.

[32] Vu, Trung-Kien & Bae, Youngsang & Oh, Seongjin. (2012). A Study of Grid-Connected PV System with Power Control Structure.

[33] Rodrigues, A & Silva, Ennio. (2019). Performance analysis of PV system grid connected using simulation tools.

[34] Ramos, Lucas & Canha, Luciane. (2019). Uncertainties in Virtual Power Plants. 1-5. 10.1109/ISGT-LA.2019.8895401.

[35] Morales, Juan & Conejo, Antonio & Madsen, Henrik & Pinson, Pierre & Zugno, Marco. (2014). Virtual Power Plants Virtual power plant. 10.1007/978-1-4614-9411-9_8.

[36] Bilbao, Javier & Bravo, Eugenio & Rebollar, Carolina & Varela, Concepción & García, Olatz. (2019). Virtual Power Plants and Virtual Inertia. 10.1007/978-3-030-23723-3_5.

[37] Edoli, Enrico & Fiorenzani, Stefano & Vargiolu, Tiziano. (2016). Virtual Power Plant Contracts. 10.1057/9781137412973_5.

[38] Lis, Robert & Czechowski, Robert. (2019). Transformation of microgrid to virtual power plant. 10.1049/PBPO139E_ch4.

[39] Meng, Yue & Zhang, Hongli. (2020). Static-Dynamic Hybrid Sequential VPP Network Analysis. IET Generation, Transmission & Distribution. 10.1049/iet-gtd.2019.1266.

[40] Carr, Sherry. (2020). Virtual Power Plants.

.

APPENDICES

Appendix A – Simulink Model and THD Signal Illustration

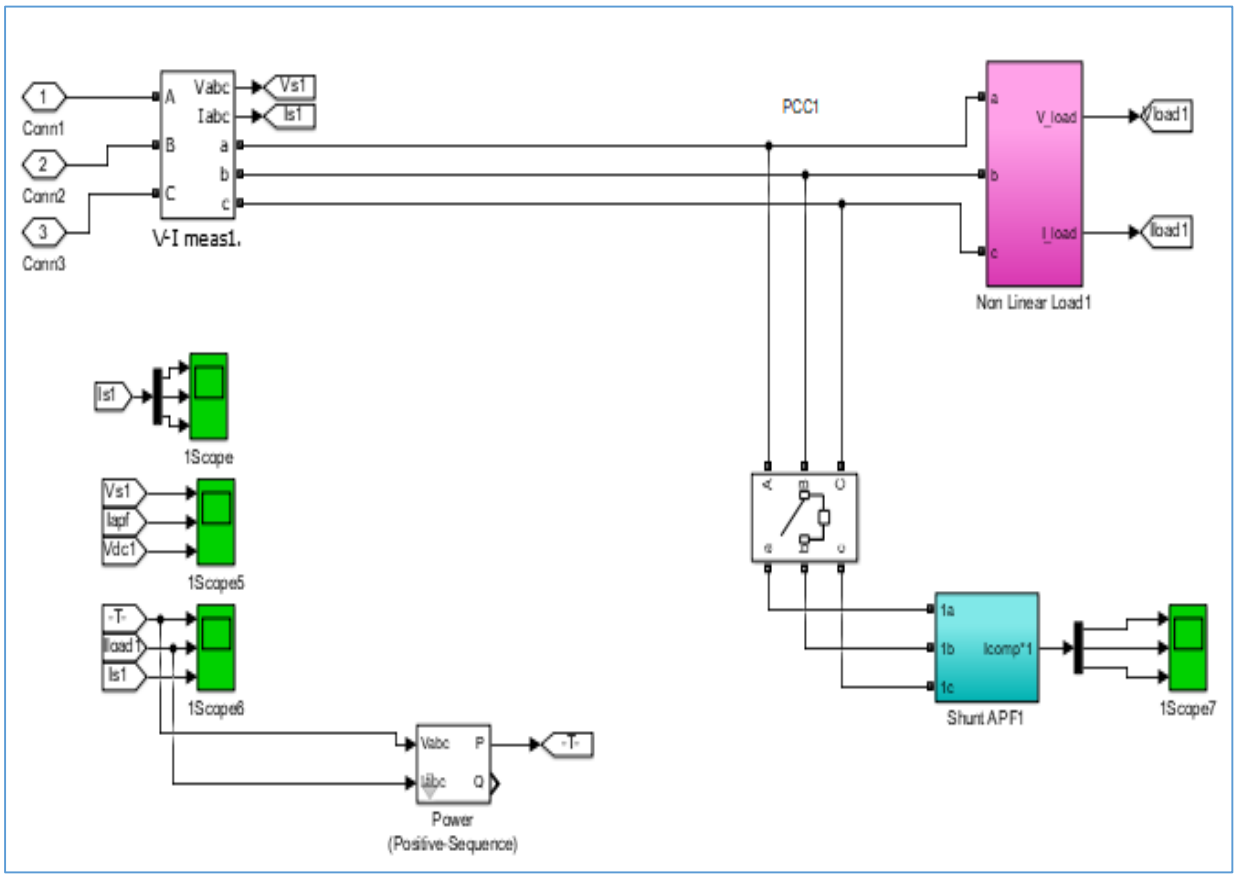

Figure A.1: Matlab Simulink V-I measurement unit, Switch, Shunt APF and Non-Linear Load connection.

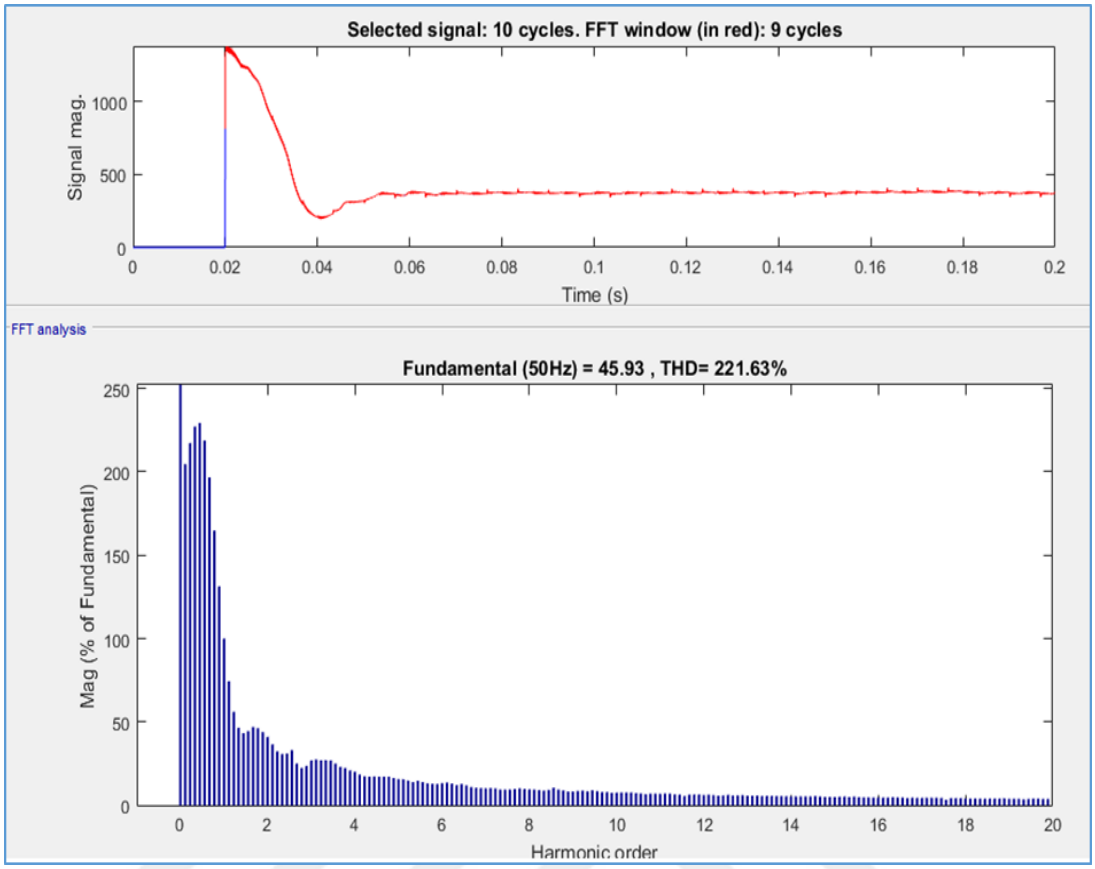

Figure A.2: Non-linear load FFT Analysis at 600W/m^2 (Grid on).

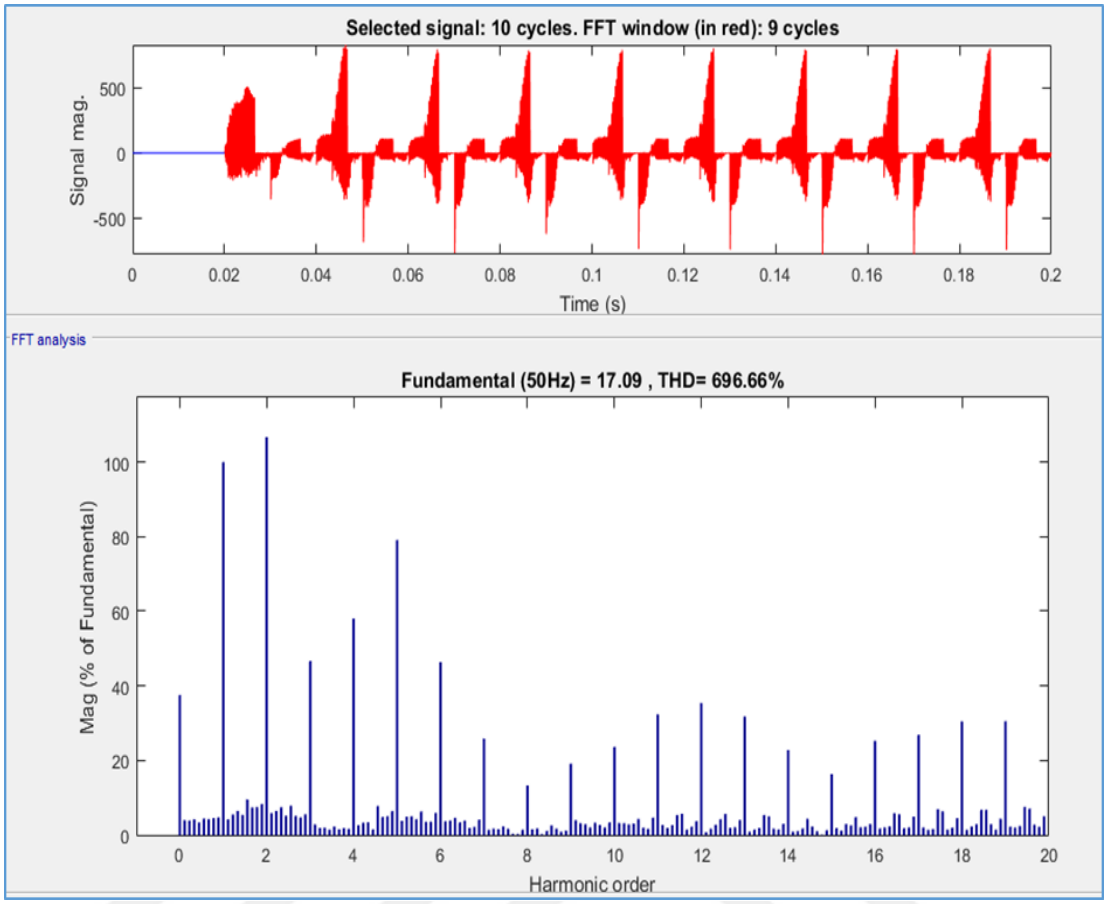

Figure A.3: GridHHPower Interface FFT analysis at STC (Grid on).

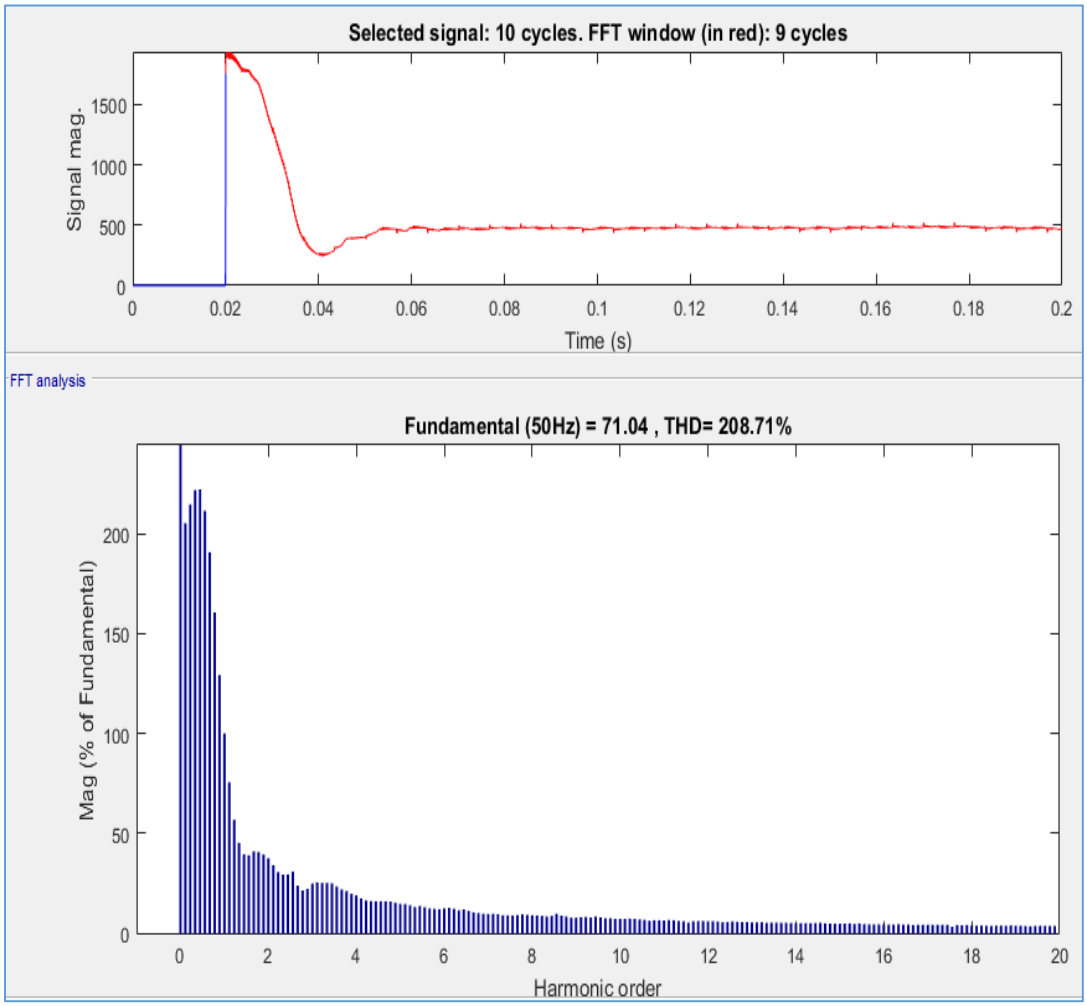

Figure A.4: Non-linear load FFT Analysis at STC (Grid on).

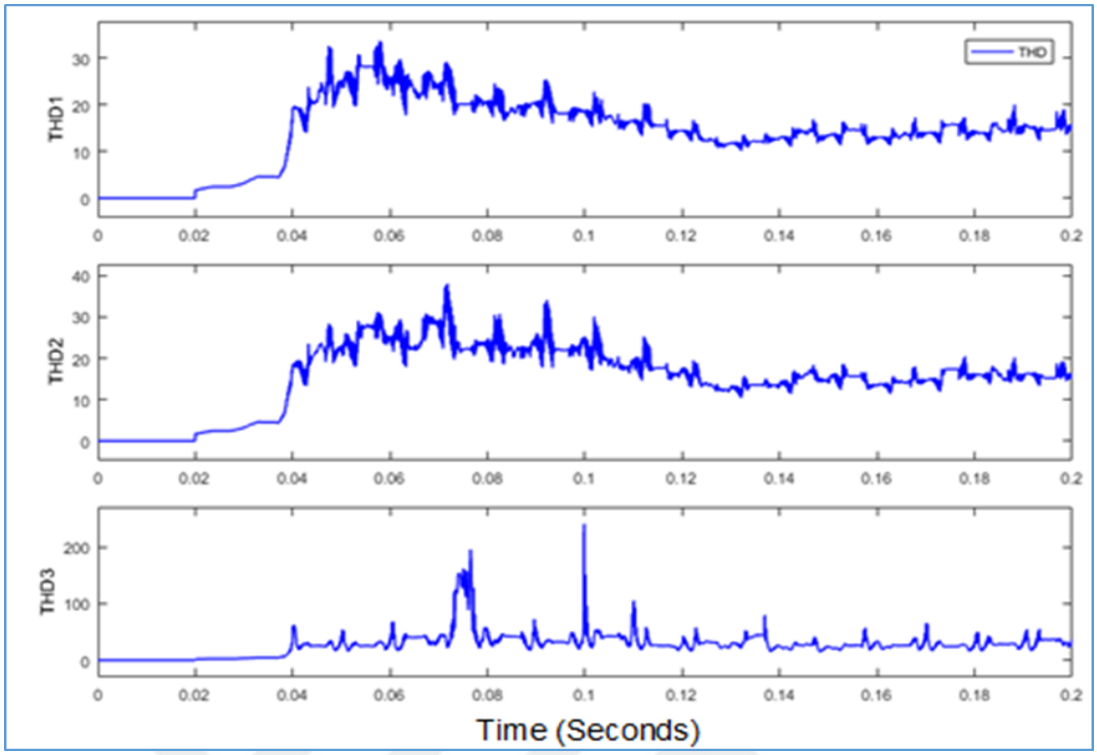

Figure A.5: THD Input Signal at STC (Grid on/off).

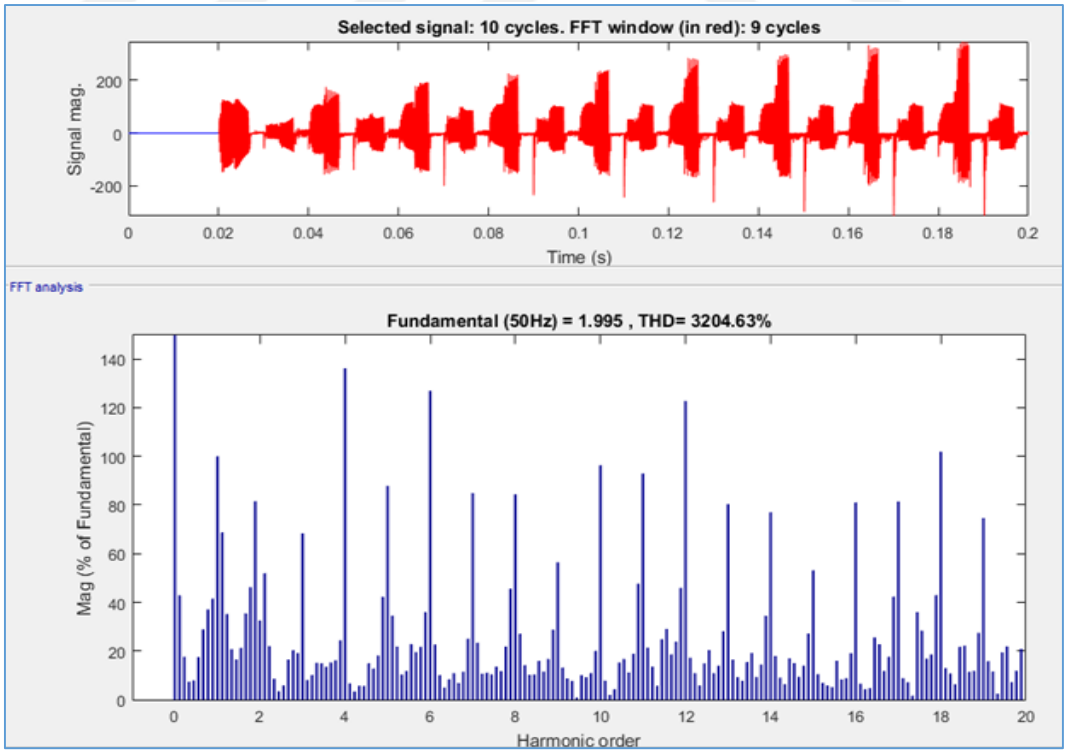

Figure A.6 GridHHPower Interface FFT analysis at STC (Grid off).

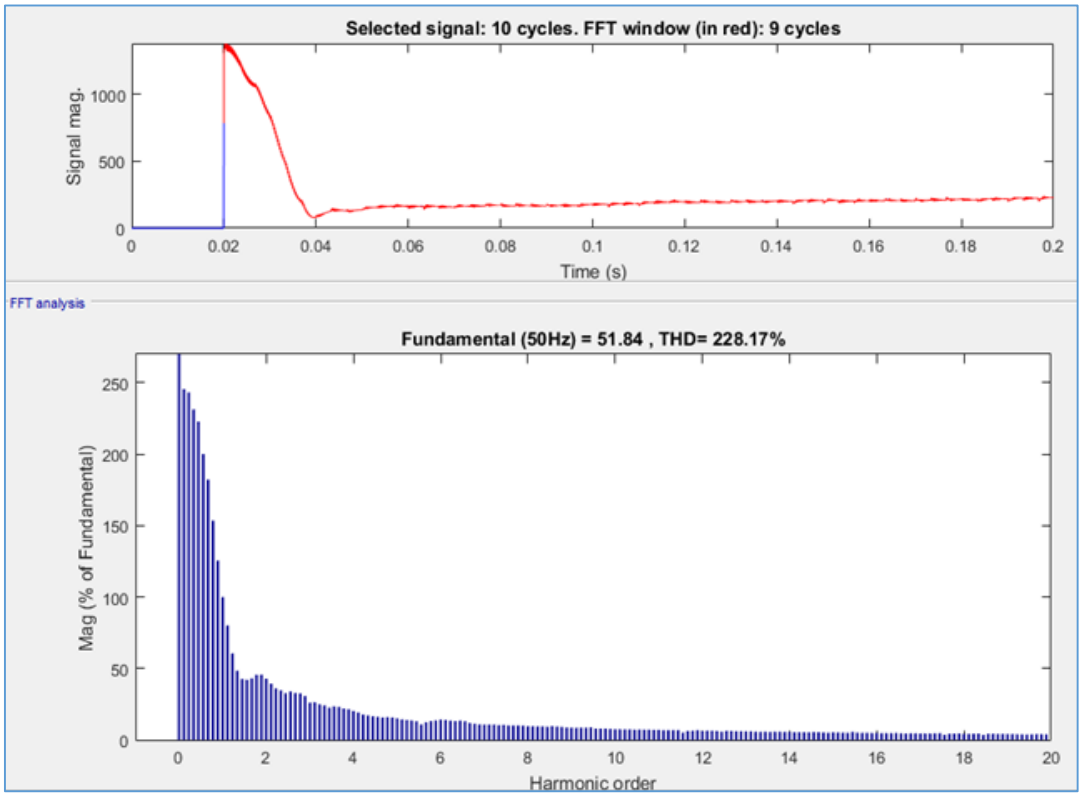

Figure A.7: Non-linear load FFT analysis (Grid off).

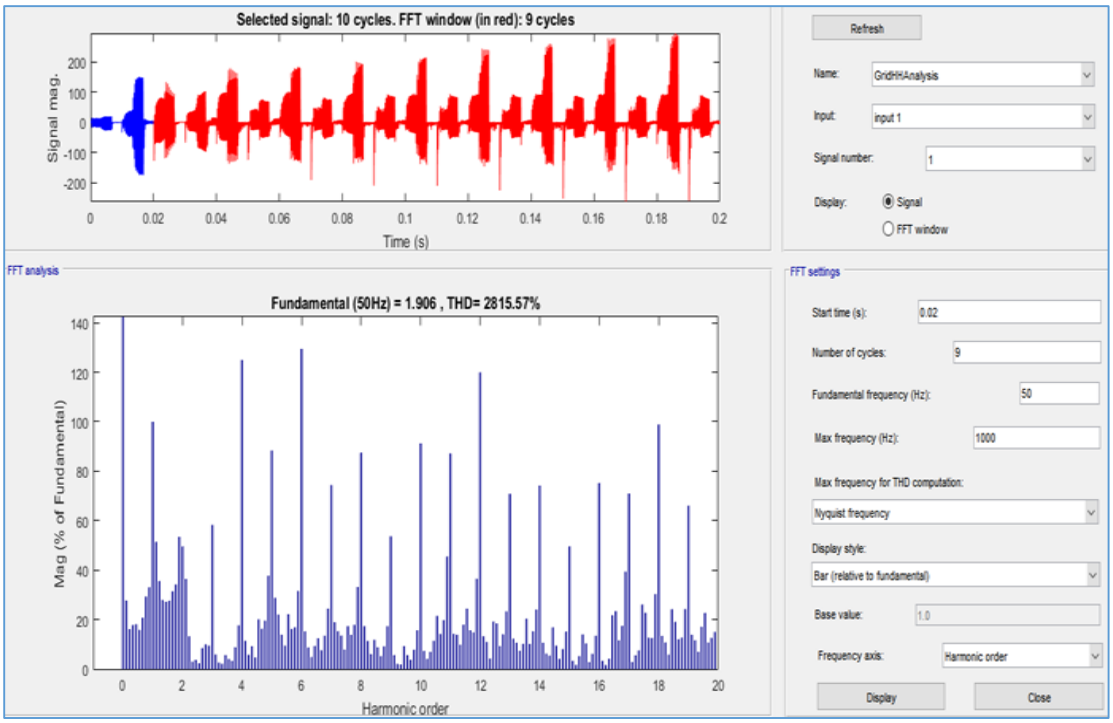

Figure A.8: GridHHPower Interface FFT analysis (Grid off).

Appendix B – Matlab Household Standard Model (3)

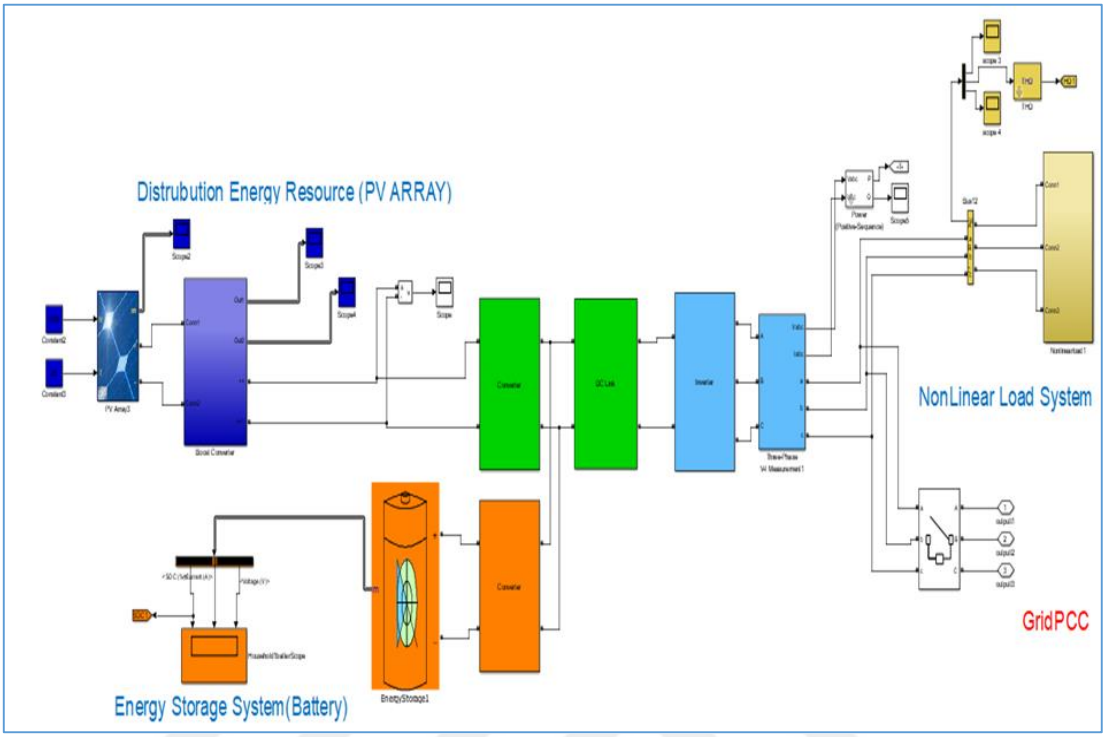

Figure B.1: Household Simulink Model.

Appendix C – Current Boost Output

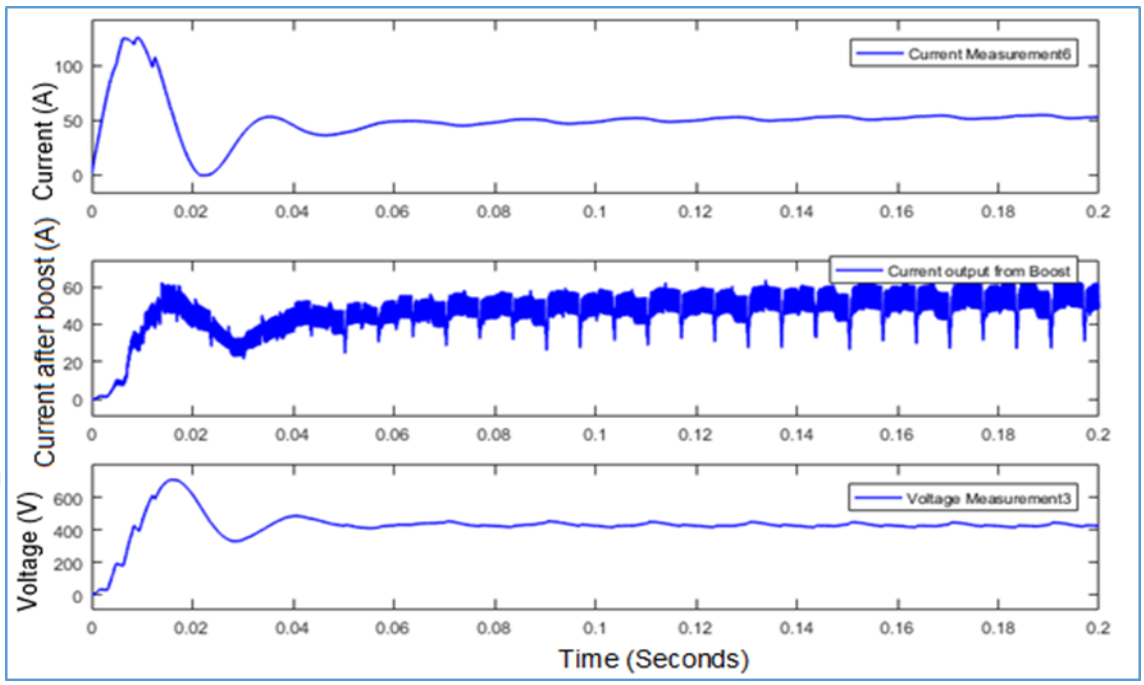

Figure C.1: Current Boost (Grid off).

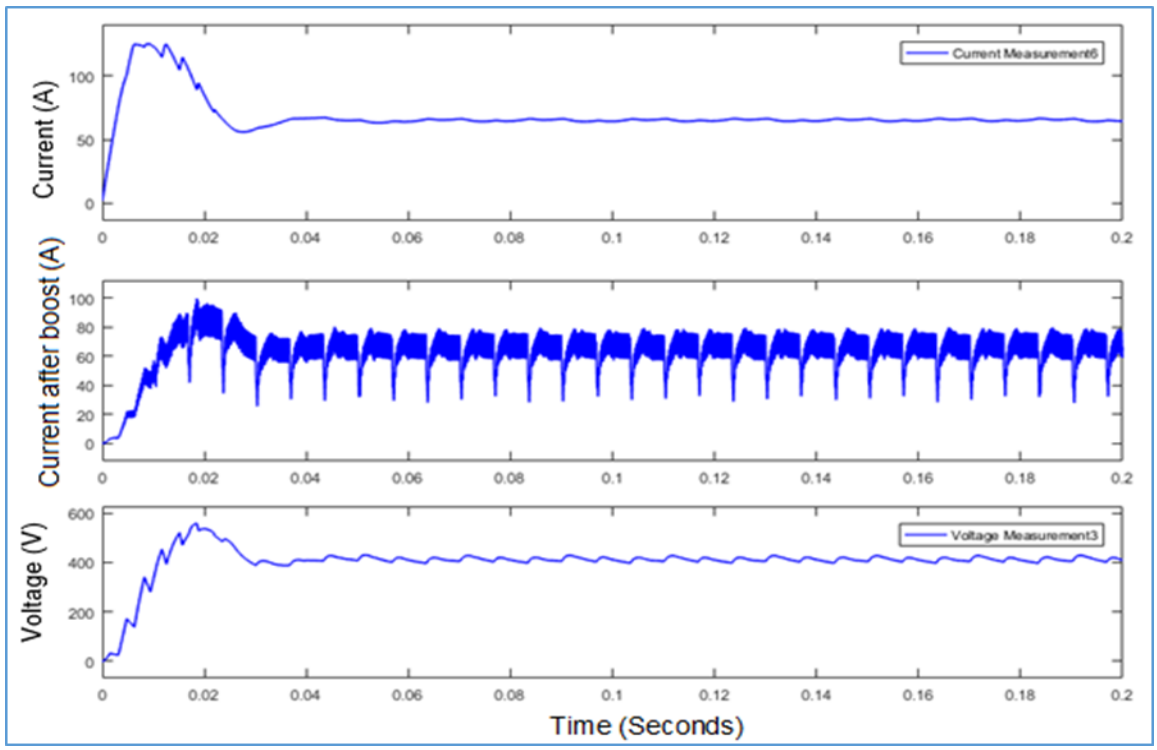

Figure C.2: Current Boost (Grid on).

Appendix D – Households Power and Non-Linear Load Data Tips

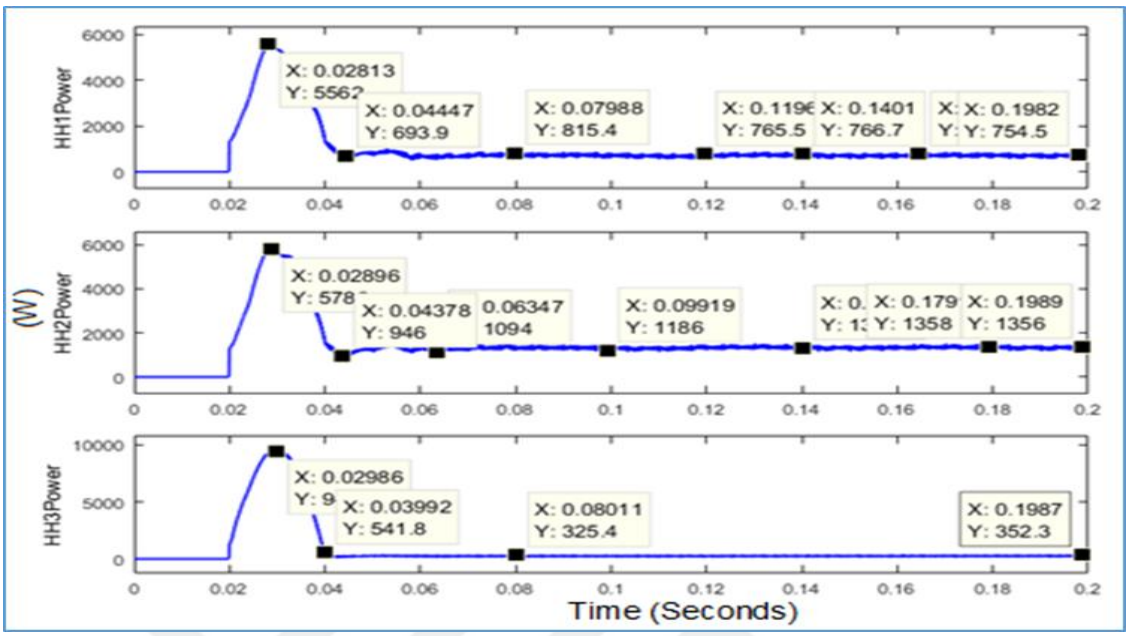

Figure D.1: Power Generation Data Tip (Grid on).

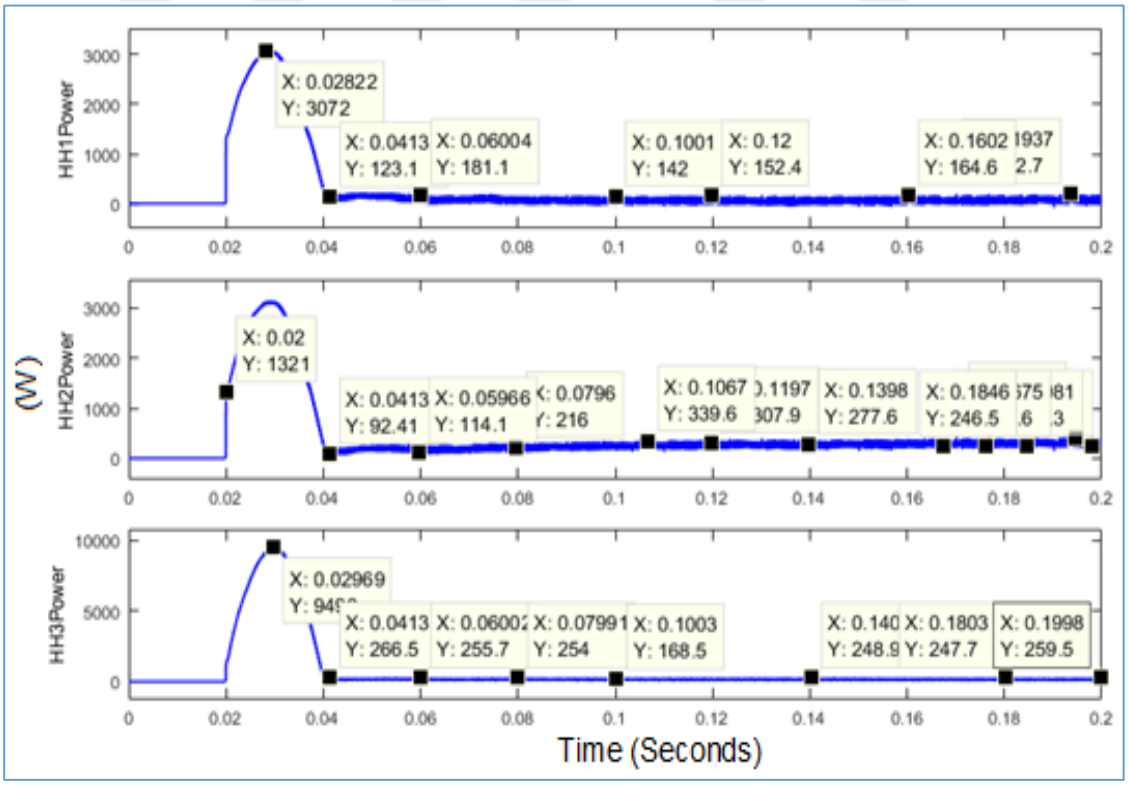

Figure D.2: Power Generation Data Tip (Grid off).

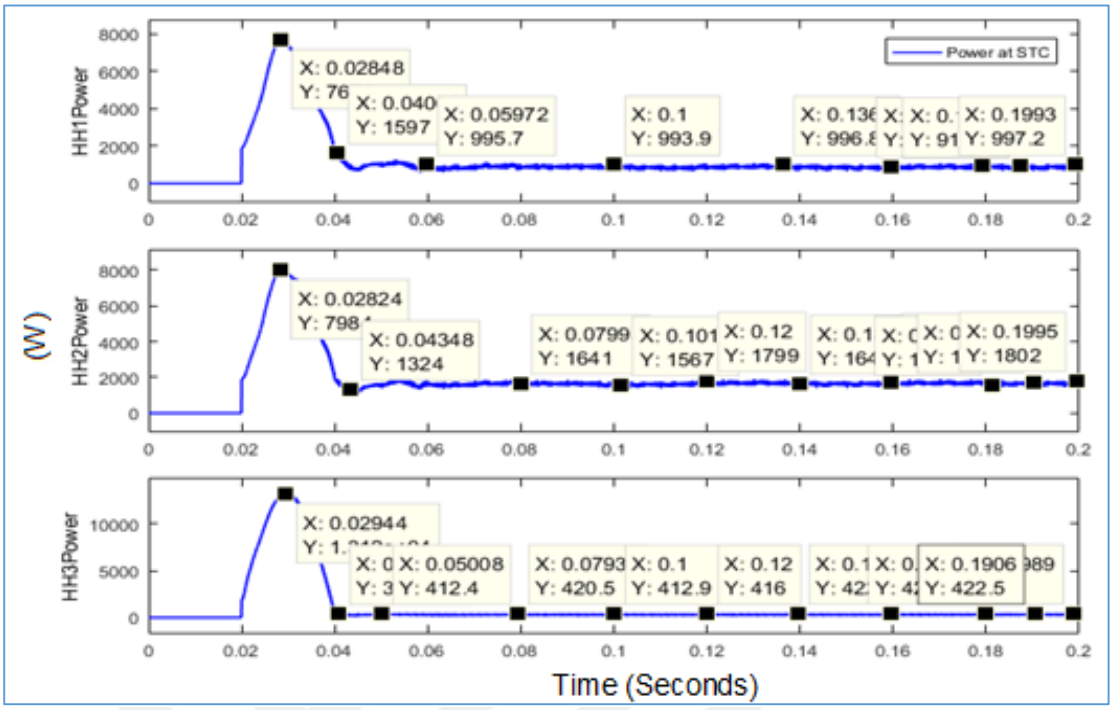

Figure D.3: Power Generation Data Tip at STC (Grid on).

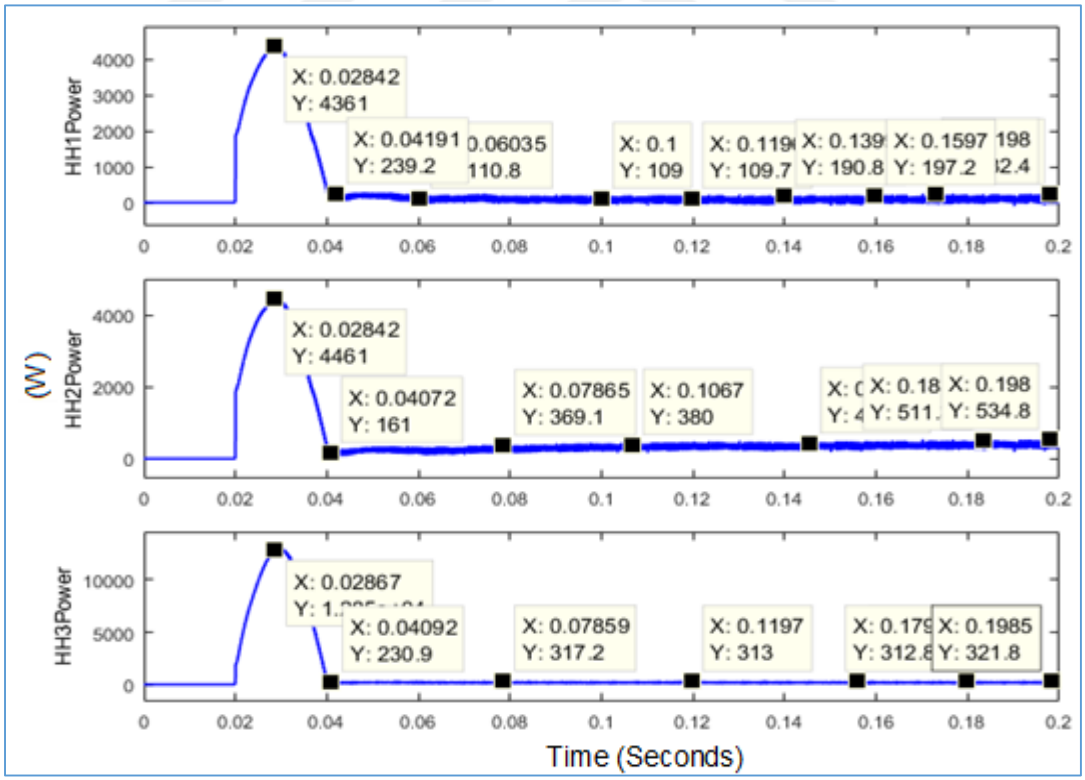

Figure D.4: Power Generation Data Tip at STC (Grid off).

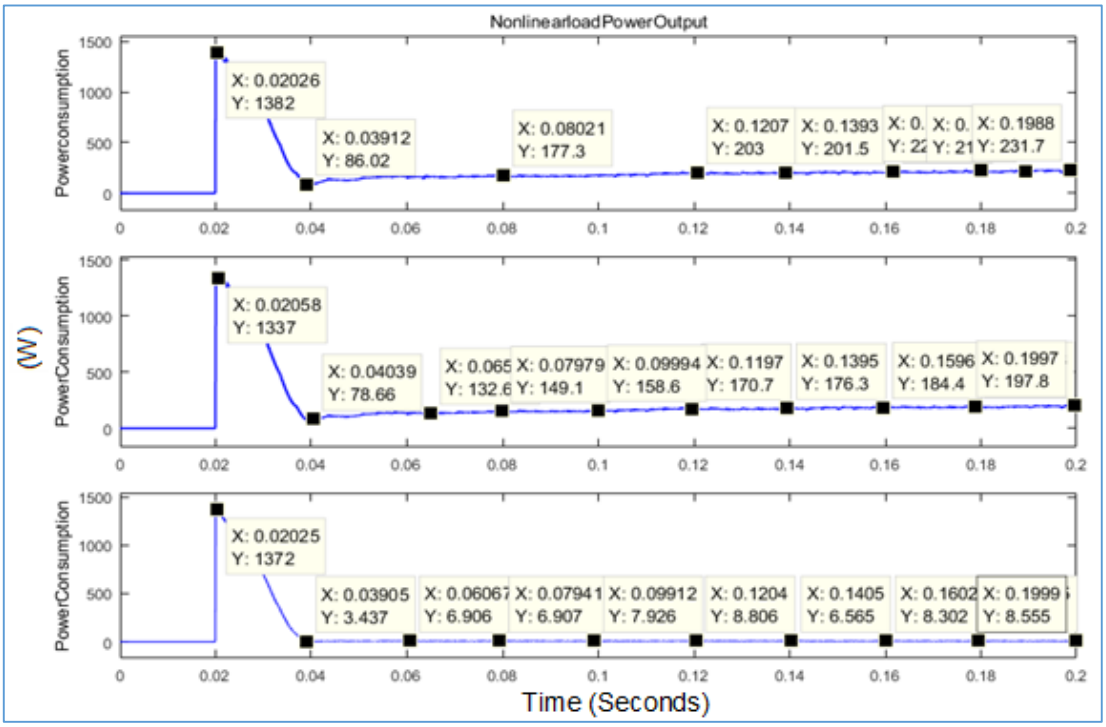

Figure D.5: Power Consumption Non-Linear Load Tip (Grid off).

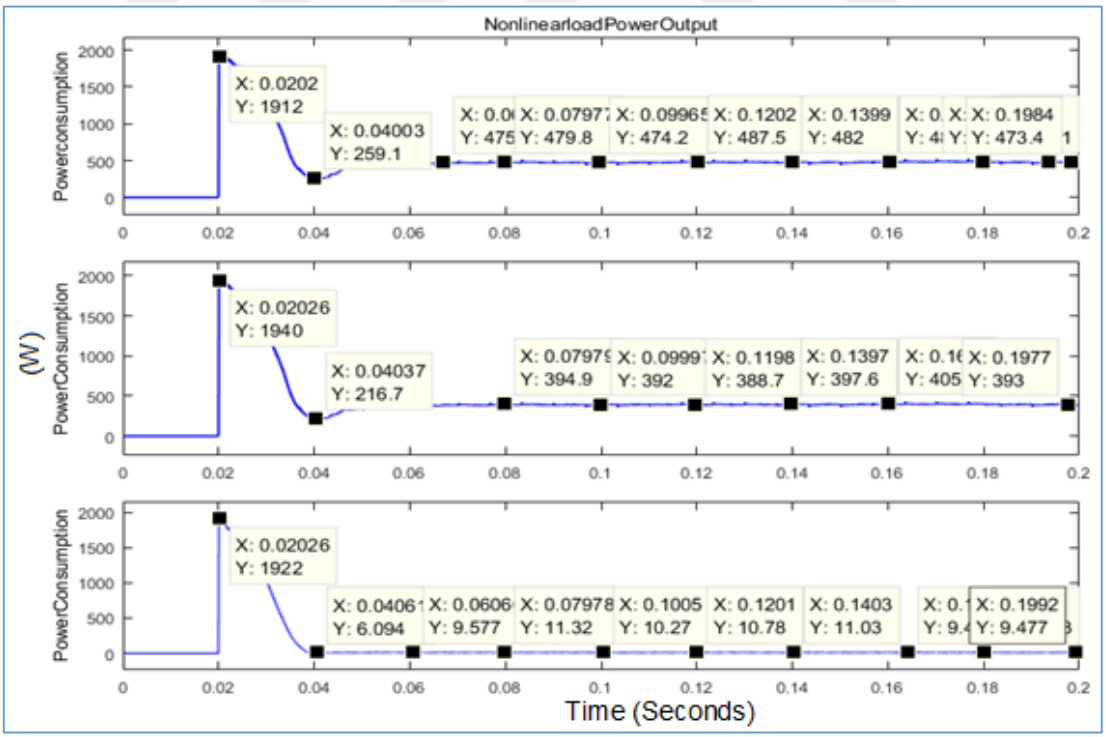

Figure D.6: Power Consumption Non-Linear Load Tip at STC (Grid on/off).

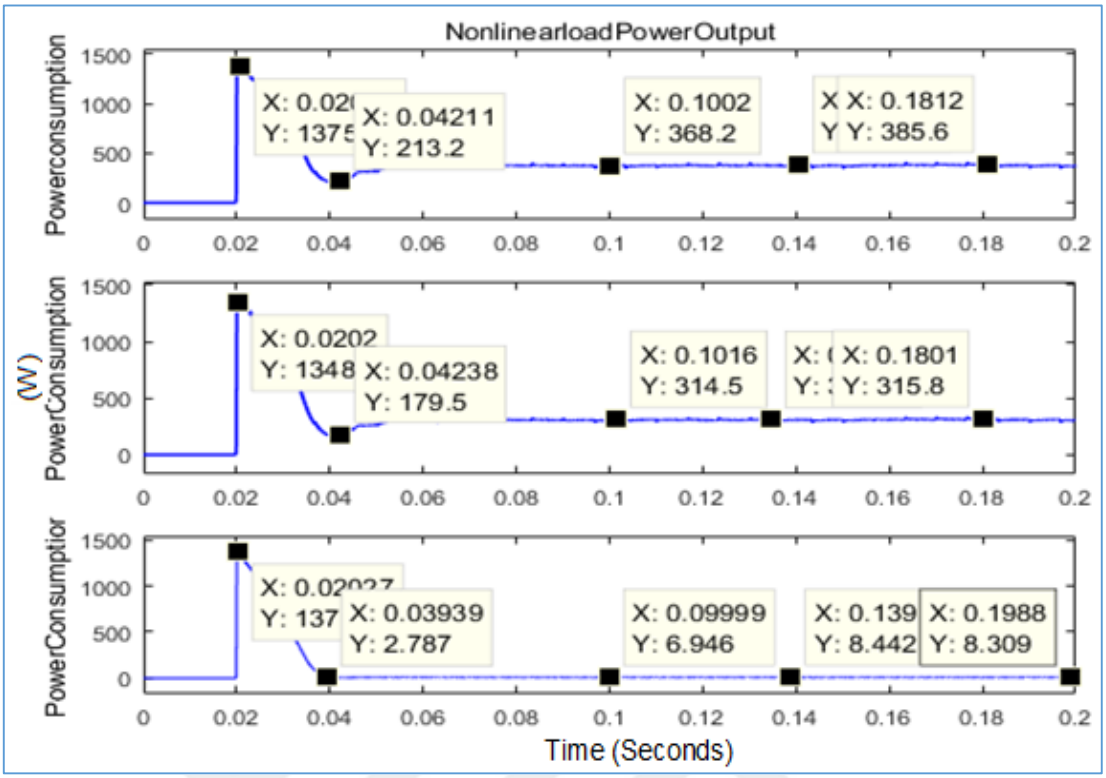

Figure D.7: Power Consumption Non-Linear Load Tip (Grid on).

CURRICULUM VITAE

PERSONAL INFORMATION



Name Surname: Obed Nelson Onsomu
Date of Birth : 29th/06/1994
Phone : 05534974619
E-mail :obedonsomu@gmail.com

EDUCATION

High School : Mobamba High School
Kenya Certificate of Secondary Education
Bachelor : Türk Hava Kurumu Üniversitesi
BSc Mechatronics Engineering
Master Degree: Yıldırım Beyazit Üniversitesi
MSc Energy Systems Engineering

WORK EXPERIENCE

Sales Engineer. : Zaks Celik Dişi ve SAN.ŞTİ. (East Africa Markets) Part 2019-2020
Academician BC and Schools. : English Language Tutor Part-tıme 2015-2020
Research and Development Assist. : Ivedic plastic Manufacturing Ltd 2016-2019

TOPICS OF INTEREST

- Virtual Power Plants and Control Systems
- Electronics and Power Supply Systems
- Photovoltaic Efficiency and Cell Modelling Technologies
- Artificial Intelligence (ANN)
- Thermodynamics
- Robotic MPPT Algorithms

June

2020ANKARA

Department of Energy Systems Engineering

Obed Nelson
ONSOMU