This article has been accepted for publication in a future issue of this journal, but has not been fully edited. Content may change prior to final publication. Citation information: DOI 10.1109/ACCESS.2021.3139761, IEEE Access

Date of publication xxxx 00, 0000, date of current version xxxx 00, 0000.

Digital Object Identifier 10.1109/ACCESS.2017.Doi Number

A Comprehensive Review on Wireless Capacitive Power Transfer Technology: Fundamentals and Applications

Mehmet Zahid Erel[1], Kamil Cagatay Bayindir[2], Mehmet Timur Aydemir[3], (Member, IEEE), Sanjay K. Chaudhary[4], (Sr. Member, IEEE), and Josep M. Guerrero[4], (Fellow, IEEE)

[1]Department of Energy Systems Engineering, Ankara Yildirim Beyazit University, Ankara 06010, TURKEY
[2]Department of Electrical and Electronics Engineering, Ankara Yildirim Beyazit University, Ankara 06010, TURKEY
[3]Department of Electrical and Electronics Engineering, Kadir Has University, İstanbul 34083, TURKEY
[4]Department of Energy Technology, Aalborg University, Aalborg 9100, DENMARK

Corresponding author: Mehmet Zahid Erel (e-mail: mzerel@ ybu.edu.tr).

ABSTRACT Capacitive power transfer (CPT) technology is becoming increasingly popular in various application areas. Due to its limitations, such as low frequency, low coupling capacitance, and the high voltage stress on metal plates, the studies on high power CPT applications fell behind previously. Therefore, the wideband gap (WBG) semiconductor devices and the compensation topologies are further adopted to tackle these limitations. The main purpose of the paper is to review CPT applications in terms of performance parameters, advantages, disadvantages and also challenges. Initially, the basic principles of CPT technology are examined, which cover compensation topologies, coupler structures, transfer distance, power electronic components, and system control methods. Then, CPT applications are evaluated for performance parameters (i.e., power level, operation frequency, system efficiency, transfer distance) along with compensation types, inverter types, and coupler types. The applications are categorized into six main groups according to industrial topics as safety, consumer electronics, transport, electric machines, biomedical, and miscellaneous. Herein, power level changes from μW to kW ranges, the operation frequency varies from 100s of kHz to 10s of MHz ranges as well. The maximum system efficiency is recorded as 97.1 %. The transfer distance varies from μm range to 100s of mm ranges. The full-bridge inverter topology and four-plate coupler structure are noticeable in CPT applications. Finally, advantages, disadvantages, and challenges of CPT applications are evaluated in detail. This review is expected to serve as a reference for researchers who study on CPT systems and their applications.

INDEX TERMS Capacitive power transfer, capacitive coupling, wireless power transfer.

I. INTRODUCTION

Wireless power transfer (WPT) technology was put forward to transmit electrical energy using coils by Nicola Tesla in 1899 [1]. In 1961, John Schuder et al. contributed to WPT technology in biomedical applications [2]. William Brown and Peter Glaser are the pioneers of contactless microwave power transfer [3, 4]. WPT can be categorized into two scenarios: far-field and near-field wireless power transfer technologies depending on the transfer distance. Far-field WPT is based on electromagnetic radiation. It can be classified into two types as optical (laser) power transfer applications [5] and microwave (radio) power transfer applications [6]. On the other hand, near-field WPT is based on non-radiative energy. The non-radiative energy can be transferred depending on the coupling techniques that are magnetic resonant coupling [7], inductive coupling [8], capacitive coupling [9], and magneto-dynamic coupling [10]. Furthermore, near-field and far-field categories are comprehensively reviewed in WPT [11]. Among the coupling techniques, inductive and capacitive coupling techniques become prominent. The foremost technique uses an alternating magnetic field to transfer power wirelessly and is hereafter called inductive power transfer (IPT). The basic inductive power transfer scheme is formed with a high frequency inverter on the primary side, a high frequency rectifier with a load on the secondary side, and an inductive coupling interface as well. The latter technique utilizes an alternating electric field to transfer power wirelessly and is hereafter called capacitive power transfer (CPT). A basic scheme of the CPT system includes a high frequency inverter on the primary side, a high frequency rectifier with a load on the secondary side, and a capacitive coupling interface. Compared to IPT technology, CPT has

This work is licensed under a Creative Commons Attribution 4.0 License. For more information, see https://creativecommons.org/licenses/by/4.0/

This article has been accepted for publication in a future issue of this journal, but has not been fully edited. Content may change prior to final publication. Citation information: DOI 10.1109/ACCESS.2021.3139761, IEEE Access

many advantages: lower cost, lightweight, lower eddy-current loss, higher reliability, and lower EMI [12]. Considering review articles regarding IPT and CPT techniques, IPT has many alternatives. For instance, electric vehicles (EVs) charging in static and dynamic charging concepts [13], in terms of state-of-the-art research [14, 15], and compensation topologies [16, 17]. Jiang *et al.* reviewed resonant and non-resonant inverter structures in terms of their key features and characteristics [18]. The authors concluded that class E_2 resonant inverter is a good option to obtain high efficiency power transfer, and the direct single-stage AC-AC non-resonant converter is a good candidate to reach the desired high frequency operation. The typical applications and future trends are also presented in a review concept for IPT [19]. Herein, typical applications are represented by Electric Vehicles (EVs), biomedical implants, and portable electronics.

Considering CPT applications, Dai and Ludois [20] presented a comparative study of inductive and capacitive couplings based on small air-gap applications. Herein, performance parameters (i.e., power level, transfer efficiency, operating frequency, transfer distance, transmitter, and receiver areas, etc.) are reviewed in detail. Furthermore, challenges and limitations are mentioned in both techniques with recommendations. Low coupling capacitance and high voltage stress on capacitive coupler are referred as the most critical ones. In a review by Rozario *et al.* [21], compensation networks in small air-gap and large air-gap applications are investigated to find the best compensator for the designer. Moreover, comparative studies on compensation networks are carried out according to the performance metrics (i.e., sensitivity to distance, tolerance on frequency, power level, and control capability). The authors concluded that while the LLC resonant network is the best compensator for small air-gap CPT applications as they provide a flexible design, double-sided LCLC, and double-sided LC compensation networks should be used in large air-gap CPT applications as they provide reduced voltage stress. Lu *et al.* [22] reviewed compensation topologies, capacitive coupler structures, and recent developments in CPT technology. In addition, a comparative study is conducted for CPT and IPT technologies in terms of their advantages and disadvantages. The authors identified that CPT has better large misalignment performance for EVs charging applications. The conventional coupler structures are also reviewed as two-plate, four-plate, six-plate, and electric field repeater. Mustapa *et al.* [23] presented a literature review on CPT technology in a biomedical implantable device. The authors point out that CPT is more robust against exposure to EMI.

This paper presents a different perspective on CPT applications. Hence, CPT applications are categorized into six main groups as safety applications, consumer electronics applications, transport applications, electric machines applications, biomedical applications, and miscellaneous applications. Then, sub-applications for each main application are determined in this paper. Firstly, we have safety applications that involve foreign object and voltage stress. The second is consumer electronics applications that embody LED lighting, portable device charging, and integrated circuits (ICs). The third one is that transport applications include electric vehicle charging, drone (UAV) charging, and underwater charging. Additionally, electric vehicle charging applications are classified as static, dynamic, bidirectional, and robotics. The fourth one is electric machines applications which cover synchronous machines, three-phase, and rotary. The fifth one is biomedical applications, and the last one is miscellaneous applications that contain hybrid and multiple transmitters/receivers. Furthermore, applications are reviewed with performance parameters (i.e., power level, operation frequency, system efficiency, and transfer distance) along with compensation types, inverter types, and coupler types. Finally, advantages, disadvantages, and also challenges of CPT applications are reviewed in detail.

Following the introductory section, this paper is organized as follows. Section II introduces the basic principles and operation of CPT. Section III elaborates the applications in detail. Finally, conclusions and suggestions are drawn in section IV.

II. BASIC PRINCIPLES AND OPERATION OF CAPACITIVE POWER TRANSFER

A typical scheme of a CPT system is represented in Fig. 1. Herein, a CPT system consists of the primary side and the secondary side. The primary side is represented by a high frequency inverter and the primary compensation network. The secondary side is represented by the secondary compensation network, rectifier, and load. The capacitive coupler is a medium, which provides a power flow loop. A high frequency inverter is used to provide AC excitation for the primary and secondary resonant components with the help of displacement current in the coupling interface. A rectifier is ultimately used to supply DC for the load. The compensation networks enable a minimum impedance to flow the current via resonance condition with improved system efficiency. Among the compensation networks, filter-based topologies are drawn attention in CPT systems, such as LC, LCL, LCLC, etc. The coupling interface plays an essential role for both primary and secondary sides. Although two-plate, four-plate, six-plate, and electric field repeater are available for the conventional capacitive coupler structures, four-plate structures are generally preferred in CPT applications. In a typical four-plate coupler structure, two plates form a forward path, and the other two plates generate a return path for the resonant current. Different materials are used for the capacitive plates, such as aluminum, zinc, copper, etc. Among the materials, aluminum metal plates are usually utilized due to the low cost. In contrast to IPT technology, alternating electric fields are used to transfer power wirelessly. Moreover, the system weight and cost are reduced due to the metal plates compared to Litz wire coils in IPT. There is no necessity for the plate thickness and shape. However, the shape of the metal plates can provide a flexible design for different applications. The electric field emission can be reduced via circular-shaped metal plates as well. Coupling capacitance depends on plate area, transfer distance, and the dielectric material between the metal plates [24].

This work is licensed under a Creative Commons Attribution 4.0 License. For more information, see https://creativecommons.org/licenses/by/4.0/

This article has been accepted for publication in a future issue of this journal, but has not been fully edited. Content may change prior to final publication. Citation information: DOI 10.1109/ACCESS.2021.3139761, IEEE Access

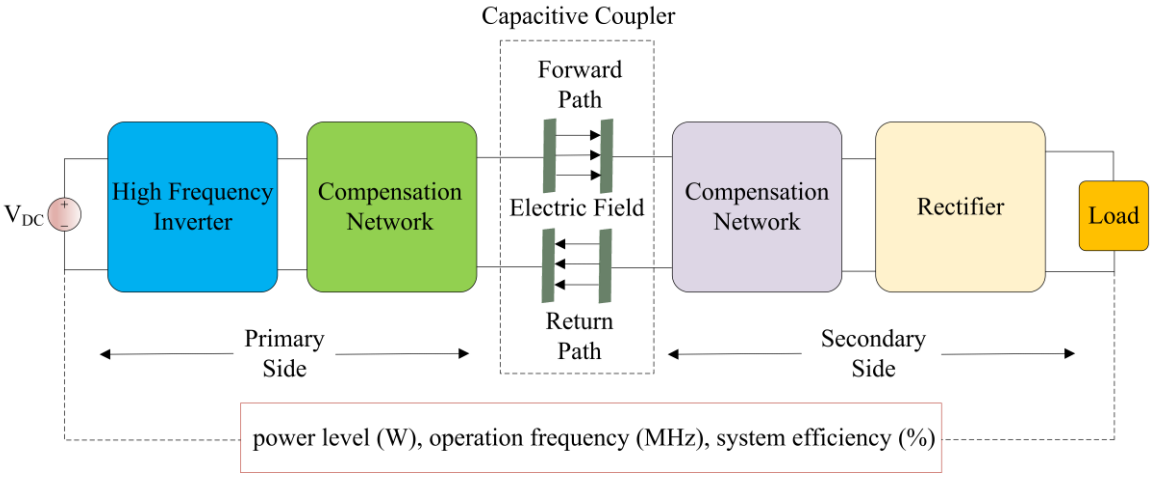

FIGURE 1. **A typical scheme of a CPT system**

As the transfer distance increases, the value of coupling capacitance decreases, and hence the switching frequency needs to be increased to obtain a sufficient power level. However, the system efficiency will drop due to increase in the switching losses. Furthermore, higher resonant inductors are required to satisfy low coupling capacitances. Higher resonant inductors lead to higher conduction losses and also lower system efficiency. Therefore, compensation networks affect system efficiency and hence they should be designed properly for high power large air-gap applications.

A. COMPENSATION TOPOLOGIES

THE BASIC STRUCTURE

Compensation topologies are an essential part of the CPT system as given in Table 1. Due to the limited size of metal plates and low permittivity of air, the coupling capacitances tend to have very low value, and it leads to a large coupling impedance. Thus, coupling impedance is generally much larger than the load impedance [25]. Compensation topologies are designed to increase the voltage across the capacitive coupler for the primary side and to reduce the voltage on the secondary side. Therefore, compensation topologies provide higher power transfer capability, higher efficiency, and minimized power rating of the converter.

PROPOSED DEVELOPMENTS IN LITERATURE

Double-sided L compensation is a filter-based topology, which provides a simplified circuit structure. Herein, the capacitive coupler acts as a resonant capacitor to compensate the series inductor [26-30] present in multi-cell applications [31], multi-phase applications [32], and also mutual capacitance effect [33-35]. Furthermore, one pulse switching active capacitor (OPSAC) is used instead of a resonant inductor to resist parameter variations [36-38]. Double-sided LCL compensation is proposed by Theodoridis to increase power transfer for portable device charging applications [39]. Zhang *et al.* presented double-sided LCL compensation for EV charging applications [40]. In addition, an optimization study is carried out to improve the parameters in double-sided LCL compensation [41]. Lu *et al.* proposed double-sided LCLC compensation [42]. Herein, the number of passive components is a disadvantage of the compensator, where the output power and system efficiency are well proportioned. Afterwards, double-sided CLLC compensation is put forward to reduce the required resonant inductance value [43]. A comparative study is carried out between LCLC and CLLC topologies considering output power and efficiency under the variations [44]. Although efficiency and output power linearly increase with the load resistance for CLLC compensation, the efficiency of LCLC compensation does not linearly increase with the load resistance. In addition, LCLC and CLLC compensation topologies have higher coupling capacitances and output power capability compared to L and LCL compensation topologies. A comparative study is carried out for LCL, LCLC, and CLLC compensation topologies in terms of voltage gain considering load, frequency, and coupling variations [45]. Thus, the CLLC compensator is the best one for system performance variation. A double-sided LC compensation is suggested for large air-gap applications [46, 47]. Herein, output power and coupling coefficient terms are inversely proportional to each other [47]. Hence, optimization studies are carried out to improve system efficiency [48-53]. The steady output voltages and higher system efficiencies are obtained due to the optimization studies. Then, a comparative study is performed to realize the characteristics of the LC, LCL and, LCLC topologies [54]. Herein, the output current, current gain, and output power terms are compared for different operating frequencies. Thus, the LCLC compensation is more robust when the operation frequency changes. Hybrid compensation networks are also reviewed, such as LC-CLC compensation to enhance the coupler misalignment performance [55] and LCL-L compensation to improve the system performance reducing the number of components [56, 57]. Multi-stage networks are proposed to provide higher voltage and current gain for high power applications [58].

This work is licensed under a Creative Commons Attribution 4.0 License. For more information, see https://creativecommons.org/licenses/by/4.0/

This article has been accepted for publication in a future issue of this journal, but has not been fully edited. Content may change prior to final publication. Citation information: DOI 10.1109/ACCESS.2021.3139761, IEEE Access

TABLE 1: Conventional compensation topologies

Compensation Topologies	Features
L compensation 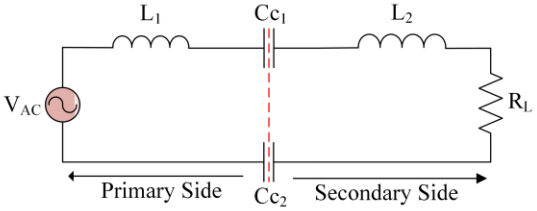	• More suitable for small air-gap applications [22] • More suitable for low power and medium power applications [59, 60] • Lower cost and simplicity [61] • Higher resonant inductance or higher switching frequency is required [22] • More sensitive to misalignments [61] • Higher input impedance [61]
LC compensation 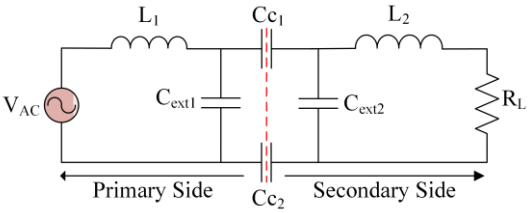	• More suitable for medium power and high power applications [48, 51] • Higher coupling capacitance and higher cost than L compensation [61] • The required resonant inductances (L_1 and L_2) are typically lower than L compensation [22] • System power is inversely proportional with the coupling coefficient [48] • Insensitive to misalignments [61]
LCL compensation 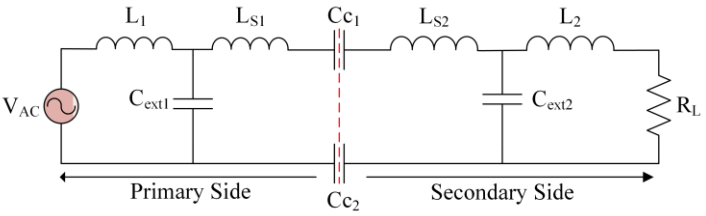	• More suitable for medium power and high power applications [40, 62] • The required resonant inductances (L_1 and L_2) are typically lower than L and LC compensation topologies [22] • Higher cost than L and LC compensation topologies [61] • System power is inversely proportional with the coupling coefficient [40] • Insensitive to misalignments [61]
LCLC compensation 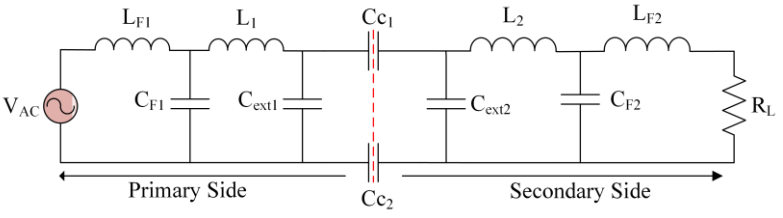	• More suitable for high power applications [22, 42] • More complex and higher cost than L, LC, and LCL compensation topologies [61] • The required resonant inductances (L_1 and L_2) are typically lower than L, LC and LCL compensation topologies [22] • System power is directly proportional with the coupling coefficient [42] • More tolerance to change in frequency compared to LC and LCL [54] • Sensitive to misalignments [61]
CLLC compensation 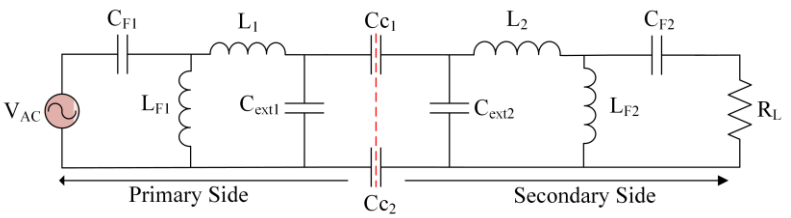	• More suitable for high power applications [43] • More complex and higher cost than L, LC, and LCL compensation topologies [22] • The required resonant inductances (L_1 and L_2) are typically lower than L, LC, LCL and LCLC compensation topologies [22] • System power is directly proportional with the coupling coefficient [43] • Higher robust for system performance variations compared to LCL and LCLC [45] • Sensitive to misalignments [43]

This work is licensed under a Creative Commons Attribution 4.0 License. For more information, see https://creativecommons.org/licenses/by/4.0/

This article has been accepted for publication in a future issue of this journal, but has not been fully edited. Content may change prior to final publication. Citation information: DOI 10.1109/ACCESS.2021.3139761, IEEE Access

Impedance-based compensation networks are proposed in CPT systems. For instance, Z impedance compensation has a symmetrical Z shape structure, which includes two identical inductors and two identical capacitors. Moreover, it has advantages encountered in short circuit and open circuit conditions [63]. F type compensation topology acquires an F shape structure, which comprises a resonant capacitor along with two resonant inductors. It has benefits in case of a sudden change in pick up [64]. Lastly, analysis and comparative works on compensation topologies are comprehensively discussed [21, 25, 61, 65-70]. The results show that conventional compensation topologies are typically used in CPT applications. Among them, L compensation has a simplified structure, typically used in small air-gap applications. However, higher resonant inductance and more sensitive to misalignments are its drawbacks. LCLC and CLLC topologies are typically used in large air-gap and high power applications since system power is proportional with the coupling coefficient value. CLLC compensation is the best one during system performance variations.

B. CAPACITIVE COUPLER STRUCTURES

THE AIM

Fig. 2 represents the classification of conventional capacitive coupler structures. The main purpose of the coupler that consists of metal plates is to provide power transfer generating electric fields.

PROPOSED DEVELOPMENTS IN LITERATURE

Initially, two-plate structures are reviewed in detail. Herein, one metal plate serves as a power transmitter and the other metal plate serves as a power receiver. Furthermore, two-plate structures are categorized into three types according to application areas in this review. Firstly, the quasi-wireless application consists of a power transmitter and a power receiver with a returning path [71-74]. In this concept, only two metal plates are required, and the other two metal plates are replaced by the earth ground, which provides the current-returning path. Zhang and Lu propose an air-gap distance of 2m quasi-wireless application [75]. According to that, it can be applied in both indoor and outdoor CPT applications. Neste et al. suggest a large surface quasi-wireless application [76, 77]. Thus, the system cost is reduced using inexpensive surfaces to transfer power. Secondly, electric vehicle charging application can be mentioned in the two-plate concept. Using parasitic capacitances between the vehicle chassis and earth ground to provide the current-returning path is the special feature for this concept. In addition, the stray capacitance provides current-returning path [78, 79]. Metal wheels also play an essential role to provide current-returning path [80, 81]. The third one is a single-wire application that includes a power transmitter, power receiver, and load [82-86]. In this concept, a physical current-returning path is not used. Moreover, the working principle of single-wire applications is depending on the voltage difference between the terminals, and hence displacement current flows through. For this condition, large misalignment tolerance is provided between the coupled plates [86]. Electric field and magnetic field distributions between two coupled circular plates are also investigated in a single-wire concept. [87]. Hence, the electric field is uniformly distributed in the middle of two coupled plates whereas the magnetic field is unevenly distributed because of the lead wires. Four-plate coupler structure can be classified into two types as two pairs of metal plates in a parallel position [88] focusing on its different grounding conditions [89] and a vertical position reducing system size and improving coupling capacitance [40, 90] along with its input and output ports configurations [91]. Moreover, misalignment conditions are discussed in four-plate structures [92-94]. Thus, the horizontal structure is more sensitive to misalignments. Besides, the port capacitance term is proposed to derive the cross-coupling capacitors in modeling of the coupler [56, 95]. The modeling of the coupling interface is presented based on the coupling coefficient term [96-98]. Herein, the reduced cross-coupling effect provides higher power transfer. Both [47, 48] mention the π type and two-port equivalent models to simplify the complicated coupler structure. A current source-based two-port model is typically used in CPT systems. However, Wang *et al.* propose an induced voltage source model to cope with coupling variations [99, 100]. The T-type model is also proposed to easily realize optimal load conditions in contrast to the π type model [101, 102]. Abramov et al. present a model to realize cross-coupling relationships between input and output ports of the CPT system [103]. The six-plate coupling structure includes active four plates inside and larger passive two plates behind to reduce electric field emissions [104-109]. The electric field repeater is proposed to increase the transfer distance [110]. In addition, the electric field repeater enables the utilization of multiple transmitters/receivers in the WPT system [22].

Besides the conventional coupler structures, different coupler designs have been proposed. Dai and Ludois propose a conformal bumper structure for EV charging applications [111]. Herein, the coupling capacitance increases with reduced air-gap during charging process. A sandwich shaped coupler is proposed to improve the system misalignment ability [112]. However, the angular misalignment is the drawback side of the coupler. A separated circular coupler is suggested for drone (UAV) applications [113]. The coupler provides enhanced mutual capacitance. The sleeve-type coupler is suggested for rotary applications to enhance the system performance [114]. The sleeve-type coupler also provides smaller coupler size, lower resonant inductance, and lower voltage on sleeves. A hybrid coupler, which consists of inductive and capacitive couplers is proposed to provide space-saving in WPT applications [115]. One of the advantages of the coupler is to provide compact and flexible structure. Nevertheless, the system model becomes complex with the integration of two-parallel frame. The role of dielectric materials is discussed for capacitive coupler structures [24, 116-118]. Therefore, the effective coupling capacitance can be considerably enhanced with the integration of dielectric materials, which have higher relative permittivity than air.

This work is licensed under a Creative Commons Attribution 4.0 License. For more information, see https://creativecommons.org/licenses/by/4.0/

This article has been accepted for publication in a future issue of this journal, but has not been fully edited. Content may change prior to final publication. Citation information: DOI 10.1109/ACCESS.2021.3139761, IEEE Access

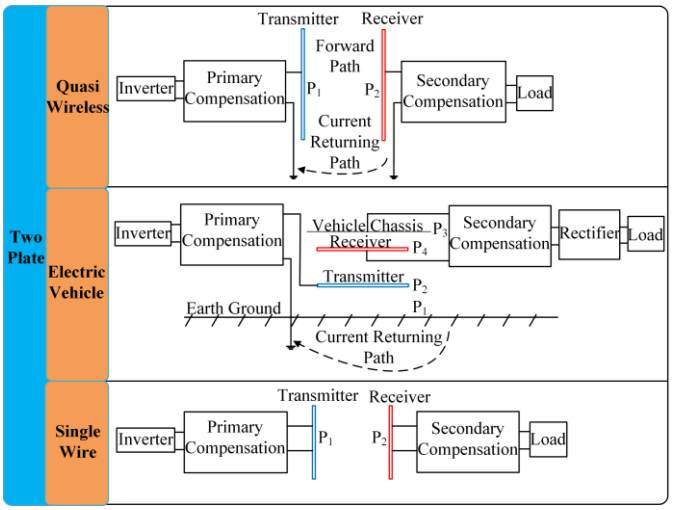

(a)

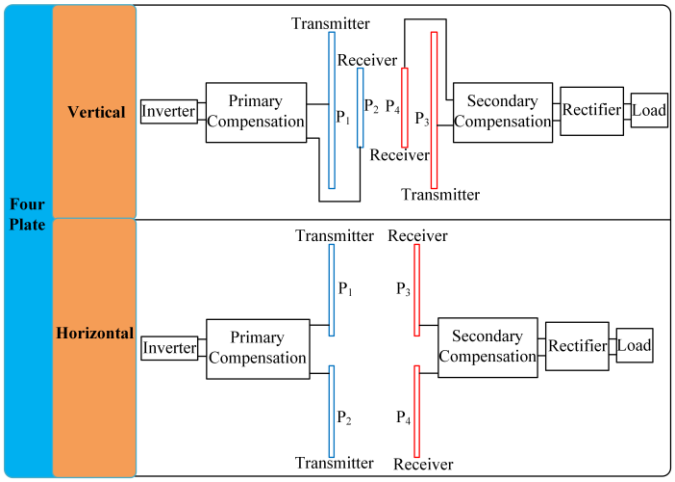

(b)

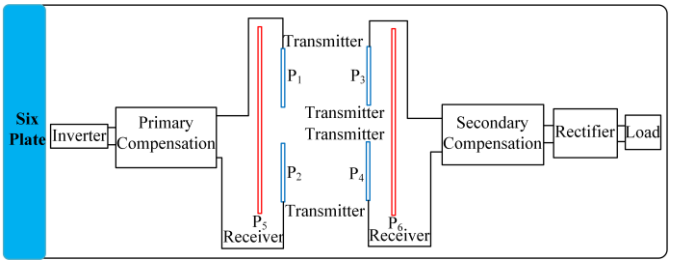

(c)

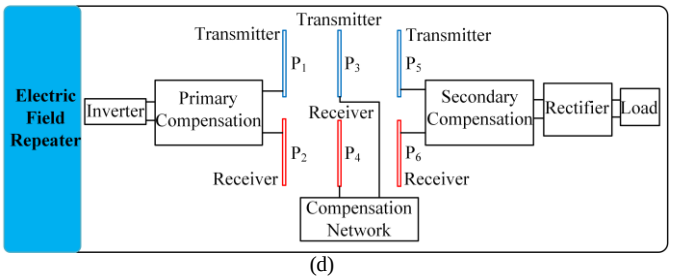

(d)

FIGURE 2. Classification of coupler structures: (a) two plate [75, 78, 86] (b) four-plate [40, 47] (c) six-plate [104] (d) electric field repeater [110].

The features of conventional capacitive coupler structures are given in Table 2. Misalignment is also a crucial issue to consider in capacitive coupler structures. There are four possible misalignment types called vertical, horizontal, angular, and rotational discussed in Table 3.

TABLE 2: Comparison of conventional capacitive coupler structures

Coupler Types	Features
Two-plate	• Reduced cost due to decreased metal plates [78] • Simplicity [22] • Large coupling tolerance with single-wire application [119]
Four-plate	• Compact structure with vertical position [40] • Increased self-capacitance with vertical position [40] • Easy to realize coupler with horizontal position [47]
Six-plate	• Higher coupling capacitance [104] • Reduced electric field emissions [106] • Extended safe area [104]
Electric field repeater	• Increased transfer distance [110] • Increased cost due to enhanced metal plates [110] • Low transfer efficiency [22]

TABLE 3: Misalignment types in capacitive coupler structures.

Misalignment Types [120]	Features
Vertical 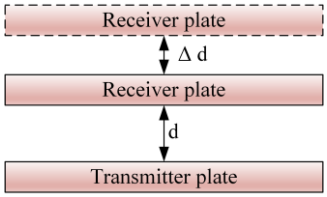	• Sensitive to two-plate [86] • Slightly sensitive to four-plate horizontal [93] • Sensitive to four-plate vertical [93]
Horizontal 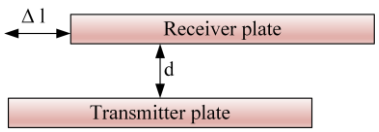	• Slightly sensitive to two-plate [86] • Sensitive to four-plate horizontal [120] • Sensitive to four-plate vertical [120] • Sensitive to six-plate [104]
Angular 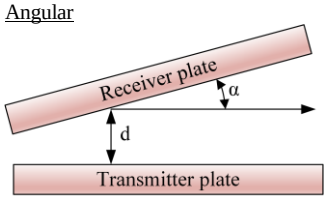	• Slightly sensitive to two-plate [86] • Slightly sensitive to four-plate horizontal [120] • Insensitive to four-plate vertical [120]
Rotational 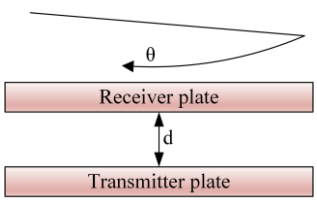	• Slightly sensitive to two-plate [86] • More sensitive to four-plate horizontal [120] • Insensitive to four-plate vertical [120]

This work is licensed under a Creative Commons Attribution 4.0 License. For more information, see https://creativecommons.org/licenses/by/4.0/

This article has been accepted for publication in a future issue of this journal, but has not been fully edited. Content may change prior to final publication. Citation information: DOI 10.1109/ACCESS.2021.3139761, IEEE Access

COUPLER METHODOLOGY

Calculation or estimation methods of coupling capacitance play a significant role to keep the resonance better in primary and secondary resonant circuits, then the compensation components are tuned accordingly [74]. Basic capacitance formula does not consider the fringing field effect, specifically large air-gap applications. Hence, finite element analysis (FEA) and response surface analysis (RSA) are used to analyze the coupler and estimate the coupling capacitance. An analytical approach is also proposed to evaluate the coupling capacitance matrix as an alternative to FEA [121].

The compatibility becomes unavoidable for the capacitive coupler structures in interoperability conditions, specifically for multiple transmitters and multiple receivers applications, which have different coupler areas or coupler configurations. For this reason, a compatibility test is carried out between different coupler configurations in terms of coupling capacitance and coupling coefficient terms [79]. Thus, the ring shaped coupler shows a good compatibility feature with the ring shaped coupler, on the other hand, the square shaped coupler shows a good compatibility feature with the square and disc shaped couplers.

In summary, the two-plate structure has advantages in terms of the reduced number of metal plates. Among the four-plate coupler structures, the four-plate vertical structure provides a compact solution, rotational misalignment tolerance, and higher self-capacitances. However, the four-plate horizontal structure is typically preferred in CPT applications due to the easily-realized equivalent circuit. Among the conventional coupler structures, the six-plate coupler is prominent in the safety concept. Nevertheless, the increased number of coupling capacitors is the drawback in realizing such couplers. The electric field repeater provides long-distance wireless power transfer. However, increased number of plates is the negative side of the coupler.

C. TRANSFER DISTANCE

Transfer distance or air-gaps classified as a small air-gap and a large air-gap play a significant role in determining output voltage and also output power in IPT and CPT applications. According to application areas, transfer distance changes crucially. For instance, the small air-gap applications are regarded as less than 10 mm, and the large air-gap applications are regarded as between 100 and 200 mm in CPT systems [118]. Transfer distance is typically selected as 150 mm, indicating the ground clearance of the vehicle chassis in large airgap-based electric vehicle charging applications [51]. Lu *et al.*, [122] achieved a maximum system efficiency with 90.8% for 150 mm transfer distance using double-sided LCLC compensation. Thus, the limitations and challenges are discussed based upon the increased transfer distance [123]. These are determined as human safety, system efficiency, the required power level, air breakdown, and allowable fringing field levels. In summary, transfer distance drastically affects the system performance in WPT applications.

D. POWER ELECTRONIC COMPONENTS AND SYSTEM CONTROL STRUCTURES

In this section, power electronic components and system control structures are thoroughly reviewed. According to that, power electronic components can be categorized into two groups as inverters and rectifiers in a general CPT system.

1) INVERTERS

Inverter structures occupy an essential place to excite resonant components for primary and secondary circuits in CPT systems. Considering inverter structures, half-bridge, full-bridge, class E, class D, class φ_2, push-pull, and quasi-resonant topologies are available in CPT systems. Among them, full-bridge and class E inverters become prominent in CPT applications, as represented in Fig. 3. The half-bridge inverters, typically use WBG devices in CPT applications [124-127]. A grid integrated structure is presented along with a boost PFC [128]. Both [129, 130] introduce the ZVS technique in low power CPT applications with half-bridge structure and asymmetric half-bridge structure, respectively. On the other hand, full-bridge inverter structures are typically used in medium power and high power CPT applications using WBG devices [78, 131, 132]. Kumar *et al.* [133] propose a full-bridge-based inverter structure to provide variable compensation in WPT systems. It is possible to provide low cost, low resonant inductance, and higher switching frequency via power amplifier topologies. However, class E, class D, and class φ_2 inverter structures have figured in CPT applications among other power amplifier-based inverters. Firstly, design methods are presented in a basic class E inverter structure [134, 135]. Herein, the system consists of an ideal active switch with a shunt capacitance, a resonant inductor, and a capacitive coupler structure with a load side, as shown in Fig. 3 (a). Saat *et al.* carry out analysis and design studies on the side of CPT technology, specifically low power applications [136-141]. Resulting from one active switch and low coupling capacitance, class E inverter is typically preferred in low power CPT applications [142-144]. To improve the power level and the transfer distance, studies are carried out using class E inverter structure [145-149]. Moreover, studies are conducted to enhance the power transfer capability and minimize the system size [150-153]. Considering class D inverter, both half-bridge and full-bridge structures are put forward [154-157]. Class D structures have lower voltage stress on the switching devices than class E structures; however, a complicated gate driver circuit and increased THD of the output voltage are the disadvantages [154]. Additionally, soft-switching methods are discussed in class D inverter structures to provide peak efficiency [158-160]. Among the CPT applications, the class D inverter is utilized in consumer electronics [60, 161]. Kim and Choi propose a class φ_2 inverter structure for CPT systems [162]. Although the class φ_2 inverter is resemble to class E inverter, it has an additional circuit formed by an inductor and a capacitor in parallel with the switch. It provides low voltage stress compared with the class E inverter structure. The push-pull converter is involved in autonomous structure for comparison with class E converter in terms of performance

This work is licensed under a Creative Commons Attribution 4.0 License. For more information, see https://creativecommons.org/licenses/by/4.0/

This article has been accepted for publication in a future issue of this journal, but has not been fully edited. Content may change prior to final publication. Citation information: DOI 10.1109/ACCESS.2021.3139761, IEEE Access

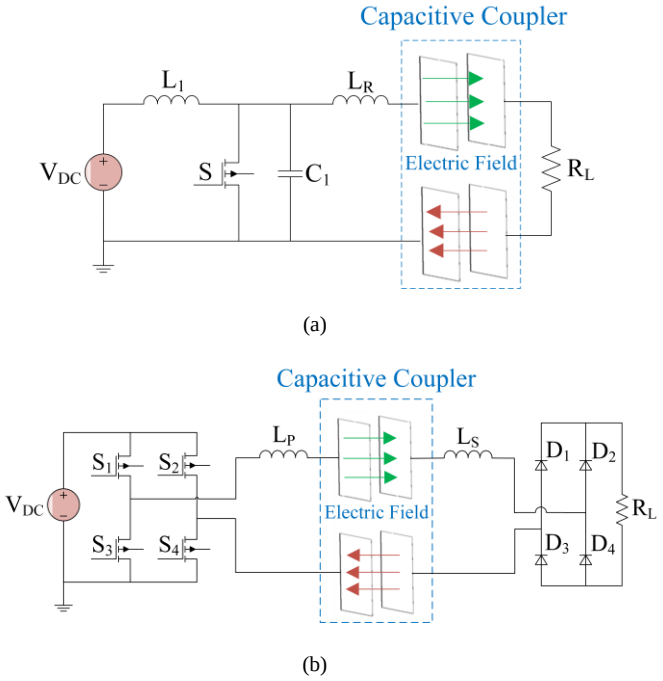

FIGURE 3. **Inverters: (a) class E (b) full-bridge.**

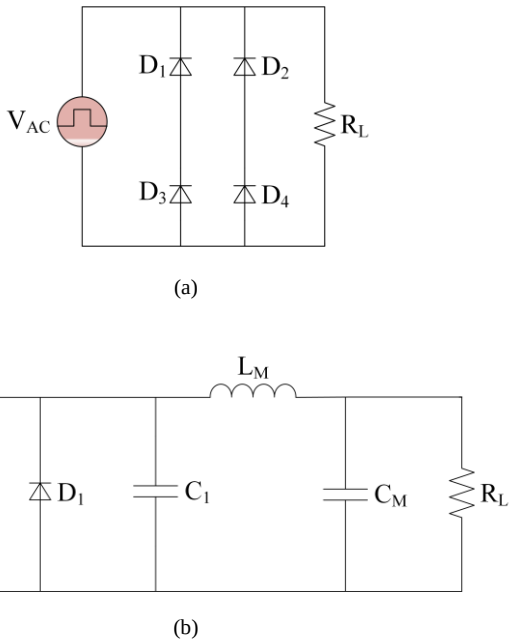

FIGURE 4. **Rectifiers: (a) full-bridge (b) class E.**

characteristics [163] and the purpose of underground data transmission [164]. A single switch quasi-resonant converter is then proposed to reduce the losses and cost [165]. In summary, the full-bridge inverter structure is typically used in high power CPT applications. Power amplifier-based inverter structures are mainly utilized in low power CPT applications.

2) RECTIFIERS

Rectifiers are of great importance in wireless power transfer applications to supply regulated output voltage for a load. Half-bridge, full-bridge, and class E structures are available in CPT rectifier topologies. Among them, full-bridge passive rectifier and class E structures become prominent, shown in Fig. 4. Initially, a half-bridge rectifier is preferred in dynamic charging railway applications as they provide low cost and low loss [80]. Full-bridge passive rectifier structures are typically used in both small air-gap and large air-gap CPT applications. A passive rectification is presented to evaluate the capacitive effect of diode rectifiers [166]. On the other hand, full-bridge active rectifier structures are utilized in bidirectional CPT applications. Class E half-bridge rectifier structures are generally used in class E^2 DC-DC converter applications that consist of class E inverter and class E rectifier. Class E full-bridge rectifier has lower diode conduction loss, higher power density, and higher frequency rectification than class E half-bridge rectifier [167]. Thus, Domingos *et al.* propose a class E full-bridge rectifier for CPT applications [168]. Active variable reactance (AVR) rectifier structure is suggested in wireless capacitive power transfer applications to compensate for large misalignment conditions and distance variations among couplers [169, 170]. In summary, class E rectifier topology is suitable for multi-MHz CPT applications due to its soft-switching capability.

On the other hand, the full-bridge passive rectifier topology becomes challenging for multi-MHz applications. Due to the capacitive effect of the diodes, there are changes in resonant frequency in high frequency operation. Although it has disadvantages also, it is typically used in medium power and high power CPT applications as it does not include complex structure. Class E rectifier structure is mainly used in low power CPT applications.

3) SYSTEM CONTROL STRUCTURES

System control structures are of great importance in properly operate CPT systems and are typically put forward for load and coupling capacitance variations.

Considering load variations, power flow control method [171], auto frequency tuning control method [128, 172], perturb & observe (P&O)-based tracking control method [130], linear quadratic gaussian (LQG) control method [173] are proposed in CPT systems. The power flow control provides automatic regulation of the output voltage against circuit parameter variations. The auto frequency tuning control provides automatic control of switching frequency to make it equal to resonant frequency during load variations. The P&O-based control method creates optimal equivalent load against the load variations via maximum power tracking. The LQG control provides constant output voltage and low switching loss by automatically adjusting the switching frequency to the resonant frequency. Additionally, PI control is used to regulate the output voltage in the case of physically separated transmitter and receiver sides [174].

Considering coupling capacitance variations, frequency bifurcation approach in control methods [175], quasi-sliding mode control [176], hybrid control [177] are suggested in CPT systems. The frequency bifurcation approach provides coupling-independent operation, and hence relatively constant efficiency and power transfer. The

This work is licensed under a Creative Commons Attribution 4.0 License. For more information, see https://creativecommons.org/licenses/by/4.0/

This article has been accepted for publication in a future issue of this journal, but has not been fully edited. Content may change prior to final publication. Citation information: DOI 10.1109/ACCESS.2021.3139761, IEEE Access

quasi-sliding mode control provides system robustness during parameter variations. The hybrid control method is used to provide constant output voltage and soft-switching operation. Herein, the output current of the inverter is first detected, and the mode of the inverter is determined by the controller.

Considering both coupling capacitance and load variations, adaptive multi-loop control [178], the on-off keying modulation control [28, 179], and output feedback control called robust H_∞ method [180] are proposed in CPT systems. The adaptive multi-loop control includes frequency tracking and matching network tuning for the primary and secondary sides. It provides power transfer regulation via variable matching networks. The on-off keying modulation control senses the average value of the supply current, and it is compared with a reference value to drive the circuit. It enables optimum frequency and maximum efficiency operation during the variations. The robust H_∞ control is an output feedback control method. It provides a regulated output voltage during the load variations. According to that, the robust H_∞ control shows a better performance as compared with the PI control.

III. APPLICATIONS ON CAPACITIVE POWER TRANSFER

In this section, applications of CPT are considered. The safety, consumer electronics, transport, electric machines, biomedical, and miscellaneous applications indicate the main CPT applications as shown in Fig. 5. Advantages and disadvantages of CPT applications are thoroughly examined in Table 12. At last, challenges of CPT applications that are variable load, transfer medium, and safety issues mentioned in detail.

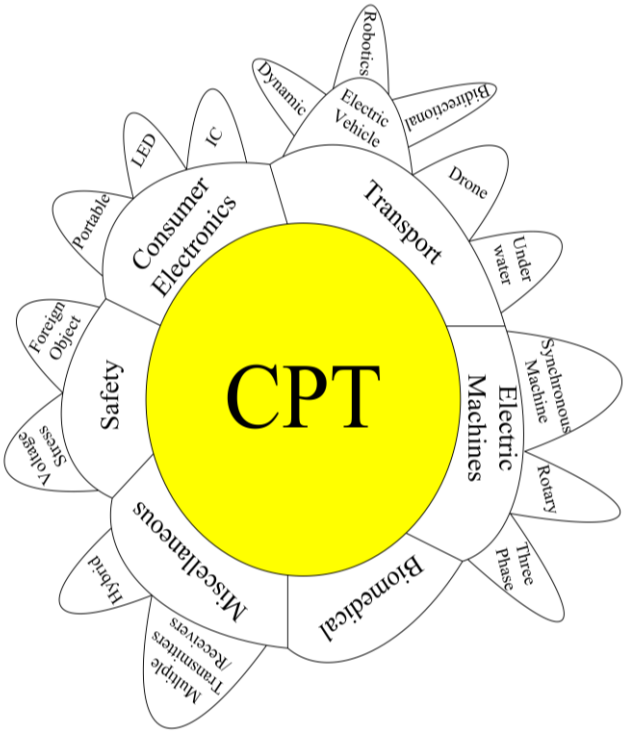

FIGURE 5. CPT applications.

A. SAFETY APPLICATIONS

Safety applications are classified as the foreign object and voltage stress. The most important features of safety applications are given in Table 4. Based on this, it is aimed to show which application type is more suitable.

1) FOREIGN OBJECT

The foreign objects affect the system performance and absorb the energy through heat formation in WPT applications [181]. Therefore, foreign objects can lead to the proper shutting down of the operating system. Foreign objects can be classified as living objects [182], metal objects [183], and dielectric materials [184] in wireless capacitive charging applications. The foreign objects are typically modeled as an equivalent circuit to observe their effects on system performance. The equivalent circuit models of a living object and a metal object are presented for EVs charging applications [185]. Additionally, their detection methods are also presented. An algorithm is proposed in low power CPT applications based on target detection [186]. Herein, the value of transmitter side capacitance is observed depending on whether foreign objects enter the system or not. The effects of foreign objects are evaluated in capacitive wireless electric vehicle charging applications [187]. It is concluded that the foreign objects significantly impact the system's performance when the object gets close to the capacitive coupler. All in all, foreign object detection is a critical issue in CPT systems that should be meet the safety requirements. Otherwise, performance degradation emerges due to the detuning of system operating frequency and resonant frequency.

2) VOLTAGE STRESS

Voltage stress applications take part in both low power and high power CPT systems for safety concept. The main principles of the voltage stress applications are to decrease electric field emissions on capacitive metal plates. For instance, the effects of electric field emissions are considered in living tissues for biomedical applications [188-190], and the human safety concept for electric vehicle charging applications [191]. Mostafa *et al.* aimed at reducing voltage stress on metal plates in secondary side of the CPT system using CL network [192], using step-down transformer [193], and utilizing buck converter [194] to provide less system sensitivity in low power applications. Luo *et al.* suggest an optimization method to improve the component values [195, 196] and investigate network design to obtain maximum power transfer in high power CPT applications [197]. Both [198, 199] present a predesigned voltage stress approach on capacitive couplers to decrease the electric field emissions. Choi *et al.* propose a method, which comprises transformer usage in CPT systems. The authors proposed a double-sided transformer usage to reduce the system sensitivity and voltage stress [35], and one transformer usage to decrease the volume of the system [200]. Lastly, a multi-objective optimization method is also evaluated to improve the parameter values [41]. In the method, the power and signal channels are modeled in a mathematical form, and objective functions are given based on the models. In summary, voltage stress applications are mainly considered for human safety reducing electric field emissions.

This work is licensed under a Creative Commons Attribution 4.0 License. For more information, see https://creativecommons.org/licenses/by/4.0/

This article has been accepted for publication in a future issue of this journal, but has not been fully edited. Content may change prior to final publication. Citation information: DOI 10.1109/ACCESS.2021.3139761, IEEE Access

TABLE 4: Safety applications.

Application Types	Output Power	Frequency	Efficiency	Compensation Types	Transfer Distance	Inverter Types	Coupler Types
Foreign object	5 W [186], 260 W [184], 507 W [187]	360 kHz [182], 429 kHz [186], 1 MHz [183, 184]	70% [184], 90% [187]	L [182, 186], LCLC [183], LCL-LCL [184], LC-LC [187]	1.60 mm [186], 10 mm [183], 60 mm [184], 12 cm [187]	Half-bridge [186], Full-bridge [182, 184, 187]	Four-plate [182-184, 186, 187]
Voltage stress	5W [35, 192], 10W [194, 200], 25W [193], 40 W [199], 60 W [198], 180 W [41], 1kW [195], 1494 W [196], 2.039 kW [197]	200 kHz [198], 300 kHz [200], 345.6 kHz [35], 489.2 kHz [41], 500 kHz [199], 800 kHz [197], 1 MHz [192-196]	55.4% [35], 65% [192], 70% [193], 79 % [200], 80 % [194], 87.47% [196], 88.88% [195], 90.29% [197]	L [35, 193, 194, 200], CL [192], CL-CL [196], CLC-CLC [195], LC-CLC [197], LCL-LCL [41], LCLC-LCLC [199], LC-LC [198]	0.2 mm [35], 0.5 mm [198], 3 mm [200], 6 mm [199], 20 mm [195], 150 mm [196, 197]	Half-bridge [35, 192-194], Full-bridge [195-200]	Four-plate [35, 192-200]

This work is licensed under a Creative Commons Attribution 4.0 License. For more information, see https://creativecommons.org/licenses/by/4.0/

This article has been accepted for publication in a future issue of this journal, but has not been fully edited. Content may change prior to final publication. Citation information: DOI 10.1109/ACCESS.2021.3139761, IEEE Access

B. CONSUMER ELECTRONICS APPLICATIONS

Consumer electronics applications are categorized as LED lighting, portable device charging, and integrated circuits (ICs). The most important features of consumer electronics applications are given in Table 5. Based on this, it is aimed to show which application type is more suitable.

1) LED LIGHTING

Due to the development of LED lighting technology in terms of lower energy consumption, lower cost, and enhanced life span operation, LED lighting applications have gained more importance for WPT applications in recent years [201]. Shmilovitz *et al.* propose a topology, which provides both power transfer and galvanic isolation. The authors concluded that lower cost, higher efficiency, and a straightforward structure are obtained [202-204], and further lower current distortion for the CPT system [205]. Considering CPT applications, LED lighting applications are used along with unipolar CPT applications [206], rotary [207], and multiple transmitters [208]. Lastly, a design structure is proposed for decorative purposes in LED lighting CPT applications [209]. In summary, LED lighting applications are mainly used in low power CPT systems. Among the converter topologies, the resonant converter is prominent in LED lighting applications.

2) PORTABLE DEVICE CHARGING

Portable device charging applications are classified as mobile phone charging and laptop charging. Initially, wireless mobile phone charging applications are evaluated in this section. Herein, a power amplifier structure with a step-up and step-down transformer is proposed to enhance the coupling capacitance and decrease the quality factor [60]. A cell-shaped capacitive coupler design is suggested for position-independent [210]. The frequency and duty cycle control method is applied to provide stable operation during coupling and load variations [28]. Both [211, 212] are proposed to achieve CPT through metal barriers. Hence, the eddy current loss is reduced with a safety operation. The constant output voltage is intended for output independence between receivers in mobile phone charging [213]. On the other hand, CPT laptop charging application is considered by Theodoridis with a design algorithm [39]. It provides minimum size and decreases voltage stress on the capacitive interface. The authors of [214, 215] discuss design methods for resonant inductors in high frequency laptop charging applications. The air-core inductor structure becomes prominent with the reduced cost. In conclusion, multi-MHz wireless charging is required to provide space-saving for portable device charging applications. The WBG semiconductor devices are drawn attention in converter topologies to enable higher efficiency. Considering compensation topologies, L compensation is widespread in portable device charging applications.

3) INTEGRATED CIRCUITS

The capacitive coupling enables electrical insulation between the ICs inside a chip. This condition makes CPT special for the projected sensitive instruments, which need to be decoupled from the noise [219]. Wireless capacitive power and data transfer are considered using bidirectional communication [218], using a subharmonic resonant system [217], and using multiple receivers [216]. In summary, capacitive coupling provides reliable and efficient energy transmission in the ICs. The reduction of power consumption is another critical issue. Additionally, transfer distance typically varies μm ranges for integrated circuits applications.

TABLE 5: Consumer electronics applications

Application Types	Output Power	Frequency	Efficiency	Compensation Types	Transfer Distance	Inverter Types	Coupler Types
Led Lighting	7 W [209], 10 W [206], 12.3 W [207], 15 W [202], 30 W [203, 204], 3x20W [205]	130 kHz [205], 200 kHz [202], 250 kHz [203, 204], 1 MHz [207, 208], 5.521 MHz [206], 6.78 MHz [209]	42.7% [207], 80% [209], 83% [206], 85% [203], 86% [205], 92% [202]	L [207, 209], LCLC [208]	1.7 mm [209], 17.7 cm [206]	Quasi resonant [202-204], Multi-string quasi resonant [205]	Two-plate [206], Four-plate [208]
Portable Device	1 W [210], 4 W [28, 60], 5 W [211, 212], 15 W [213], 25 W [39], 45 W [214]	1 MHz [39, 210, 211], 1.54 MHz [214], 1.66 MHz [215], 4 MHz [28], 6.78 MHz [60, 212], 10 MHz [213]	76% [60], 80 % [28, 39], 83.6% [213], 90% [211], 93.4% [214], 93.5% [212]	L [28, 60, 210-212, 214, 215], LCCL-LC [213], LCL-LCL [39]	0.13 mm [28], 0.635 mm [212], <1mm [213], 1.275 mm [214], 2 mm [211]	Class D [60], Class E [210], Half-bridge [28, 39, 213, 214], Full-bridge [215]	Two-plate [215], Four-plate [28, 39, 60, 212, 213]
Integrated Circuits (ICs)	(0.14, 0.19) μW [216], 62 mW [217]	1 MHz [216], 1 -15 MHz [218]	50.7% [217]	L [217]	8 μm [216], 10 μm [218]	Half-bridge [217],	Electric Field Repeater [216, 218]

This work is licensed under a Creative Commons Attribution 4.0 License. For more information, see https://creativecommons.org/licenses/by/4.0/

This article has been accepted for publication in a future issue of this journal, but has not been fully edited. Content may change prior to final publication. Citation information: DOI 10.1109/ACCESS.2021.3139761, IEEE Access

C. TRANSPORT APPLICATIONS

Transport applications are categorized as electric vehicle charging, drone charging, and underwater charging, as represented in Fig. 6. CPT for EV charging is represented in Fig. 6 (a). CPT for underwater charging is depicted in Fig. 6 (b). CPT for drone charging is shown in Fig. 6. (c). EVs charging applications are also grouped as static, dynamic, bidirectional, and robotics. The most important features of transport applications are given in Table 6. Based on this, it is aimed to show which application type is more suitable.

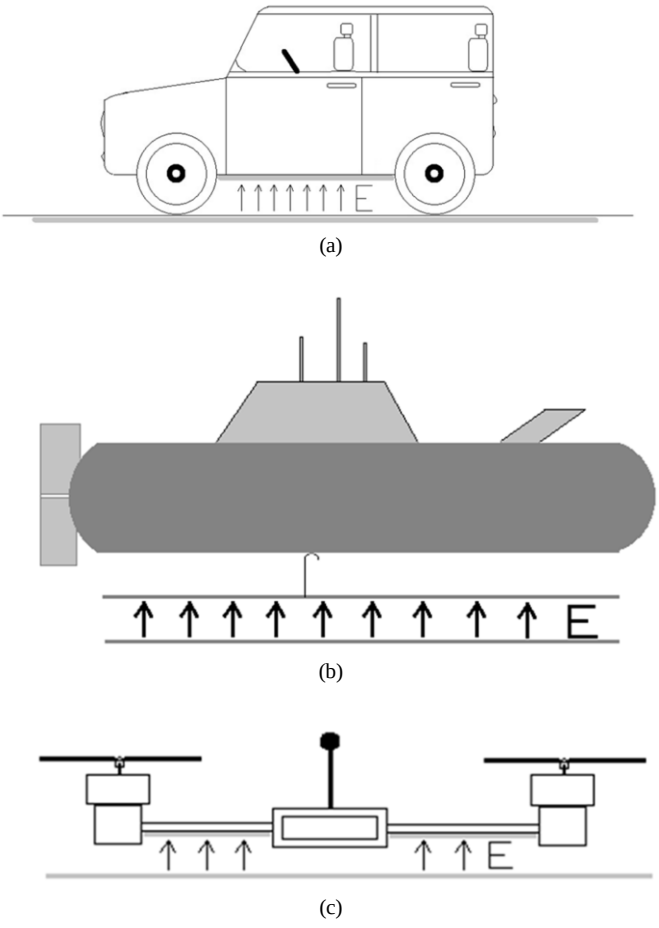

(a)

(b)

(c)

FIGURE 6. Transport applications: (a) electric vehicle charging (b) underwater charging (c) drone charging.

1) ELECTRIC VEHICLE CHARGING

STATIC CHARGING

Electric vehicle charging applications can be classified into two types as static wireless charging and dynamic wireless charging. Static wireless charging is a stationary charging type that overcomes hazardous cable charging problems. Major design principles of stationary wireless charging can be stated as the selection of switching frequency, coupler design, compensation circuit design, and converter design considering safety, efficiency, volume, and cost. When it is necessary to increase the transfer distance between the plates, low coupling capacitance becomes the most challenging problem, especially in high power CPT systems. To tackle this problem, higher resonant inductances, higher switching frequency, and kV level voltages on metal plates are required [90]. Thus, different compensation topologies are proposed to increase the voltages on metal plates, such as double-sided LCLC compensation [42, 220], double-sided CLLC compensation [43], double-sided LC compensation [78, 105, 221-224], double-sided LCL compensation [40] and LCL-L compensation [57]. To adapt EV charging applications in CPT systems, switching frequency is also increased to MHz ranges using WBG semiconductors [221, 225]. Furthermore, multi-modular inverter structures [132, 226, 227] and mutual capacitance effect [33, 71] are evaluated in CPT systems to increase the power level. Resonant inductances are also investigated in EV charging applications for CPT systems [222, 228, 229]. When the voltages on metal plates are increased to kV level, electric field emission rises that should otherwise be compatible with the standards. Hence, the design of capacitive coupler structures is considered to reduce the electric field strength in EV charging applications [78, 79, 104, 230-232]. Finally, EV charging applications need to satisfy power transfer requirements. These are related to the switching frequency, coupling coefficient value, and voltages on the coupler. In addition, full-bridge inverter topology and high-order compensation topologies become prominent in this application concept.

DYNAMIC CHARGING

The structure of a dynamic CPT system includes the roadway side and vehicle side. The roadway side comprises the power transmitter plate inside the roadway connected with the inverter and primary compensation network. The vehicle side includes the power receiver plate connected with the compensation network and rectifier with a battery. Dynamic wireless charging applications can be categorized as capacitive coupler-based studies [77, 233-235] and roadway investigation-based studies [80, 81, 236-238] in CPT systems. The reduction of electric field emissions is emphasized on coupler-based studies. The design of roadway-powered CPT system is highlighted in roadway investigation-based studies. The benefits and the drawbacks of the dynamic wireless charging system are highlighted in [239, 240]. The increased driving range, reduced battery size, decreased traffic congestion and pollution are the benefits of the dynamic wireless charging, the high cost of the system makes up the drawback side. Although, dynamic capacitive wireless charging has its unique benefits such as low cost, high-reliability metal plates in a long-track system, good misalignment performance, and no eddy-current loss, but the self-inductance of the transmitter metal plates should be given attention in a high frequency operation.

BIDIRECTIONAL CHARGING

Despite CPT technology mainly used in unidirectional EV charging applications, it has also been used for bidirectional EV charging applications in recent years. A phase-shifted control method is proposed in a bidirectional CPT system with a compact coupler structure [241]. The control method provides the maximum power transfer efficiency by

This work is licensed under a Creative Commons Attribution 4.0 License. For more information, see https://creativecommons.org/licenses/by/4.0/

This article has been accepted for publication in a future issue of this journal, but has not been fully edited. Content may change prior to final publication. Citation information: DOI 10.1109/ACCESS.2021.3139761, IEEE Access

controlling the output voltage of the inverter in the secondary side. A bidirectional converter is proposed to provide both inductive and capacitive power transfer [242]. Herein, the bidirectional converter is a DC-DC converter, which enables the modularity of the system. A parameter design method is suggested for maintaining constant output voltage in coupling capacitance and load variations [243]. Both [244, 245] utilize a phase-shifted control method for bidirectional electric vehicle charging and underwater charging applications, respectively. The method enables to control the power flow direction and magnitude. As a result, the power flow is controlled in a bidirectional CPT system, and hence effective power transfer is achieved in these applications. In addition, full-bridge inverter topology with WBG semiconductor devices is mainly used to enhance the power transfer capability.

ROBOTICS CHARGING

As robot technology advances, the demand for it has increased accordingly, and also our life has become easier. However, when it comes to wireless robots charging technology, there are a couple of studies in CPT applications. This is because of its limitations and challenges that are thoroughly reviewed [246]. The challenges are expressed as the required power transfer, system efficiency, human safety, transfer distance, and transmission medium. A shielded design is proposed to reduce electric field emissions along with analysis and design studies in wireless EV robotics charging applications [247]. A bidirectional structure is proposed to provide energy stability in different robots [248]. Furthermore, energy sharing and balancing are considered in robotics charging applications [249]. In conclusion, robotics applications are regarded as mini EVs charging applications. For this application concept, the high frequency operation and L compensation topology become prominent.

2) DRONE (UAV)

Considering drone applications, many techniques are put forward to increase the flight range, such as battery damping or the use of high voltage power headlines [250]. Limitations and challenges are evaluated in drone charging applications [251]. According to that, the main limitations of electric UAVs are their limited battery capacity and their less robustness. Both inductive and capacitive power transfer technologies are investigated in drone charging applications [252]. Considering CPT applications, the receiver side of the system is minimized to ensure compatibility [253, 254], and to obtain the maximum efficiency [255]. A capacitive coupler design is proposed to decrease parasitic capacitances with a rotational misalignment capability [113, 256]. A master/slave approach between drones is suggested for increasing flight range by using different coupling configurations [257]. Herein, the matrix arrangement structure has a higher mutual capacitance than the horizontal and vertical structures. As a result, unmanned electric vehicles (UAV) are used in a wide range of areas from military to farming. Thanks to the CPT technology, the limited operating time is not a critical point.

3) UNDERWATER

Capacitive WPT technology is a good candidate for underwater charging applications. The reason for this is the low cost of metal plates and their endurance to the high pressure of the underwater environment. Moreover, the high permittivity of seawater could improve the coupling capacitance, and hence increased power transfer capability [258]. Taking of a long time at charge/discharge process of underwater devices, limited range, and higher cost of system maintenance bring out wireless underwater charging approach [259]. Tamura *et al.* present a capacitive coupler structure for underwater CPT applications considering coupling coefficient and quality factor terms depending on the frequency [260, 261]. An improved conductivity of capacitive coupler structure is suggested for underwater CPT applications [262]. Zhang *et al.* contributed to underwater CPT applications investigating high power long-distance electric ship charging [258, 263]. Thus, MW level power transfer and hundreds of millimeter ranges for transfer distance can be achieved in wireless capacitive electric ship charging. Electric vessel charging is also evaluated using equivalent circuit models to realize the CPT system [264]. Herein, CPT provides a cheaper, lighter, and more reliable charging solution compared to IPT technology for small vessels. In summary, capacitive coupler designs are mainly considered in underwater charging applications to use the high conductivity of seawater. Moreover, double-sided LC compensation topology and full-bridge inverter topology have become prominent in this application concept.

This work is licensed under a Creative Commons Attribution 4.0 License. For more information, see https://creativecommons.org/licenses/by/4.0/

This article has been accepted for publication in a future issue of this journal, but has not been fully edited. Content may change prior to final publication. Citation information: DOI 10.1109/ACCESS.2021.3139761, IEEE Access

TABLE 6: Transport applications

Application Types	Output Power	Frequency	Efficiency	Compensation Types	Transfer Distance	Inverter Types	Coupler Types
Electric Vehicle Static	0.1-0.5 kW [78, 132] 0.5-1 kW [105, 221, 224, 227], 1-2 kW [33, 40, 57, 71, 104, 223, 226, 230, 232], 2-3 kW [42, 43, 222], 3-4 kW [228, 229, 231]	90 kHz [71], 250 kHz [33], 1 MHz [40, 42, 43, 57, 104], 6.78 MHz [78, 105, 132, 223, 224, 226, 227, 232], 13.56 MHz [221, 222, 228, 229, 231]	74.1% [78], 74.7% [223, 232], 82% [227], 85.5% [57], 85.87% [40], 88.2% [105], 89.3% [43], 89.8% [226], 90% [222, 230], 90.4% [132], 90.8% [42], 91%,94%[33], 91.3% [221], 91.6% [104], 93% [229], >94% [231], 94.7% [228], 96% [71]	L [33, 71, 78, 230], LCLC-LCLC [42], CLLC-CLLC [43], LCL-LCL [40, 104], LC-LC [105, 132, 221-224, 226-229, 231, 232], LCL-L [57]	1.2 cm [132], 12 cm [105, 221-224, 226-229, 231, 232], 110 mm [78], 150 mm [40, 42, 43, 57, 104]	Full-bridge [33, 40, 42, 43, 57, 71, 78, 104, 105, 132, 221-224, 226-229, 231, 232], Half-bridge [33], Class E [230]	Two-plate [78], Four-plate [33, 40, 42, 43, 57, 132, 221-224, 226-232], Six-plate [104, 105]
Electric Vehicle Dynamic	150 W [235], 261 W [234], 700 W [80], 1 kW [81]	1.5 MHz [234, 235], 2 MHz [80], 13.56 MHz [81]	80% [81] , 85.4% [235], 90 % [234], 91 % [80]	LCLC-LCLC [235], LC-LC [80, 81, 234]	17 mm [80] , 50 mm [235], 150 mm [234]	Half-bridge [80], Full-bridge [234, 235], RF inverter [81]	Four-plate [80, 235], Six-plate [234]
Electric Vehicle Bidirectional	100 W [243, 245], 180 W [242], 300 W [244]	100 kHz [241], 600 kHz [243], 625 kHz [245], 1 MHz [244], 1.2 MHz [242]	80.15% [245], 87.9% [243], 97.1% [242]	LCLC-LCLC [244, 245], LCL-LCL [241], LC-LC [243]	0.1 mm [242], 150 mm [244, 245]	Full-bridge [241, 243-245]	Four-plate [241, 243, 245]
Electric Vehicle Robotics	10 W [247] , 20 W [248]	13.56 MHz [247, 248]	79% [248] , 85% [247]	L [247, 248]	0.25 mm [248], 3 cm [247]	Class D [248]	Four-plate [248], Six-plate [247]
Drone (UAV)	8 W [253], 45 W [255], 56 W [256], 72 W [257], 100 W [113]	1 MHz [113, 256], 1-6 MHz [257], 6.78 MHz [253-255]	77 % [253], 78.2 % [255], 85 % [257], 88.1 % [256], 89.4 % [113]	LC-LC [113, 255-257], CLC-L [253]	2 mm [255], 15 mm [256], 20 mm [257], 25 mm [113]	Full-bridge [113, 253, 256], Class E [255]	Four-plate [113, 253, 255-257]
Underwater	219.6 W [263], 226.9 W [258], 1.018 kW [262]	1 MHz [258, 263], 6.78 MHz [262, 264],	60.17% [263], 60.2 % [258], 94.5% [262], 95 % [264]	LC-LC [258, 263]	150 mm [262], 200 mm [264], 500 mm [258, 263]	Full-bridge [258, 263]	Two-plate [258, 264], Four-plate [262, 263]

This work is licensed under a Creative Commons Attribution 4.0 License. For more information, see https://creativecommons.org/licenses/by/4.0/

This article has been accepted for publication in a future issue of this journal, but has not been fully edited. Content may change prior to final publication. Citation information: DOI 10.1109/ACCESS.2021.3139761, IEEE Access

D. ELECTRIC MACHINES APPLICATIONS

Electric machines applications are classified as synchronous machines, three-phase, and rotary. Among them, rotary application has become most popular, depicted in Fig. 7. The most important features of electric machines applications are given in Table 7. Based on this, it is aimed to show which application type is more suitable.

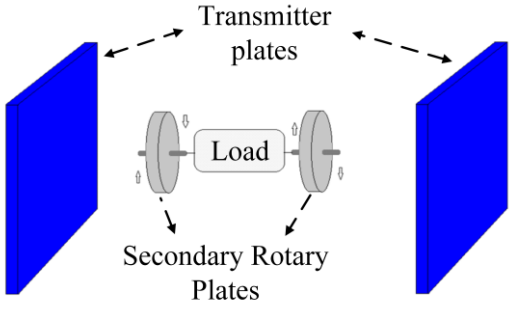

FIGURE 7. **Electric machines rotary application.**

1) SYNCHRONOUS MACHINES

With the use of CPT technology in synchronous machine applications, many advantages are offered such as maintenance is not required, no arcs, and non-sensitivity to speed [265]. Ludois et al. [266] suggest a method that couples power to the rotor in replacement of slip rings. A rotating rectifier board as a coupler is suggested for wound field synchronous machines [267]. On the other hand, the synchronous generator field excitation is elaborated using CPT technology considering minimized cost [268] and voltage regulation [59]. In summary, CPT technology is preferred in synchronous machines to feed the rotor field winding without using slip rings and rotary transformers.

2) THREE-PHASE

A single-phase structure is typically available in CPT applications. Conversely, the three-phase structure is not still as sufficient as it should be. Contactless CPT is achieved between stationary and rotating parts by utilizing the capacitance of the linear bearings [32, 269]. A three-phase structure is applied to rotary applications using e-GaN FETs [270]. The three-leg inverter with a four-wire model is proposed to enhance the system misalignment ability [271]. As a result, higher coupling capacitance and improved power transfer capability are provided via three-phase coupler structure.

3) ROTARY

Rotary applications are formed by using stationary primary plates and rotating secondary plates [180]. Capacitive coupler structures are evaluated in rotary applications [114, 207]. The capacitive coupler structure provides freedom of movement between the primary and secondary metal plates. Aerodynamic fluid bearings are proposed to increase the coupling capacitance by decreasing the distance between the stationary and moving parts [272]. To improve the system efficiency and robustness, an auto-tuning circuit using PI control method [273], the output feedback control method [180], and a cascaded boost-class E converter structure [274] are suggested for rotary applications. A three-phase CPT system is suggested for rotary applications to provide balanced and good coupling between the electrodes during rotations [270]. In summary, CPT technology provides 360 degrees free rotation in this application concept eliminating power cables.

TABLE 7: Electric machines applications.

Application Types	Output Power	Frequency	Efficiency	Compensation Types	Transfer Distance	Inverter Types	Coupler Types
Synchronous Machines	340 W [59, 268], 675 W [267]	500 kHz [266], 626 kHz [265], ~1 MHz [59, 268], 2 MHz [267]	71.5% [266], 85% [59], 90.3% [267], 94% [265]	L [59, 265-268]	0.081 mm [59, 268], 0.8 mm [265-267]	Full-bridge [265-267], Class E [59, 268]	Four-plate [59, 265-268]
Three-phase	50 W [270], 111.9 W [32, 269], 2.1 kW [271]	1 MHz [271], 3.4 MHz [269], 3.66 MHz [32], 27.12 MHz [270]	73% [270], 75.7 % [32], 87.46 % [271], 95% [269]	L [32, 269, 270], CLC-CLC [271]	25 mm [270], 30 mm [271]	Three-phase inverter [32, 269-271]	Six-plate [270], Electric Field Repeater [32, 269, 271]
Rotary	5.5 W [273], 7.67 W [274], 12.3 W [207] , 50 W [270], 100 W [272], 100.8 W [114]	700 kHz [114], 848 kHz [272], 1 MHz [180, 207, 273, 274], 27.12 MHz [270]	42.7% [207] , 73% [270], 76% [274], 77% [180], 83.33% [273], 85.3% [114], 94% [272]	L [270, 272], LC-LC [114], LCCL [274]	125 µm[272], 0.1 mm [273], 1 mm [274], 5 mm [114], 25 mm [270]	Half-bridge [114], Full-bridge [272], Class E [180, 273, 274], Three-phase [270]	Four-plate [114, 180, 207, 272-274], Six-plate [270]

This work is licensed under a Creative Commons Attribution 4.0 License. For more information, see https://creativecommons.org/licenses/by/4.0/

This article has been accepted for publication in a future issue of this journal, but has not been fully edited. Content may change prior to final publication. Citation information: DOI 10.1109/ACCESS.2021.3139761, IEEE Access

E. BIOMEDICAL APPLICATIONS

CPT technology has distinguishing features such as low eddy-current loss and lightweight in biomedical applications, and, therefore, there is a growing interest. CPT technology in biomedical applications is evaluated in Table 8. Based on this, it is aimed to show which application is more suitable for biomedical applications. Capacitive wireless charging method is used in deeply implanted biomedical applications [275, 276]. Deeply implanted biomedical devices that become a challenging application for WPT technologies because it required minimum implant size and low tissue heating. Herein, CPT technology provides safe charging with reduced EMI and low tissue heating. Erfani *et al.* present rectifier structures [277, 278], and capacitive network effect in CPT biomedical applications [190]. Herein, the capacitive link is formed with two pairs of parallel plates using tissue as a dielectric material for the external side (transmitter) and implant side (receiver). A circuit model is proposed to investigate the effects of different parameters on self-capacitance (SC)-based power transfer approach using a mouse cadaver [279]. An analog front-end structure is designed in wireless capacitive pressure sensors [280]. Electrocardiogram (ECG) is considered in terms of signal isolation [281] and power consumption [282]. Capacitive wireless power and data telemetry are suggested for biomedical implants [179, 283]. Capacitive wireless power and data transmissions decrease the risk of infection, complexity, and frequent intervention [284]. A comparative study is carried out for neurostimulation regarding performance analysis of inductive, capacitive and ultra-sound coupling techniques [285]. According to that, the most suitable technique varies depending on the application type due to its unique benefits. A coil shape design is presented to improve the coupling capacitance between the transmitter and receiver antennas for biomedical implant devices [286]. An optimization study for class E inverter topology is presented in biomedical implants [287]. Herein, the optimization study provides good performance during load and coupling variations. In summary, CPT technology provides reduced EMI and more robust performance nearby metallic objects for biomedical applications compared to IPT technology. Capacitive coupling mainly uses two pairs of parallel plates with tissue as a dielectric material. The multi-MHz frequency operation is typically selected to minimize the size for wireless capacitive biomedical applications.

TABLE 8: Biomedical applications.

Application Types	Output Power	Frequency	Efficiency	Compensation Types	Transfer Distance	Inverter Types	Coupler Types
Biomedical	20-200 μW [279], 65 mW [277], 150 mW [283], 214-319 mW [190], >230mW [278]	0.1-3.5 MHz [283], 120 kHz [190], 500 kHz [179], 1-15 MHz [279], 2 MHz [277], 2-10 MHz [278], 6.78 MHz [276], 13.56 MHz [287]	>40% [278], 42.21% [276], 54% [283], 58-61% [190], 90% [279], 90.75% [277], 96.34% [287]	L [190, 276, 283], LCL [287]	1 mm [179], 3 mm [277, 278], 5 mm [190], up to 8 mm [283], 15-30 mm [276], 40 mm [287], 70 mm [279]	Class E [276, 287], Class D [283]	Four-plate [179, 277, 278, 283, 287]

This work is licensed under a Creative Commons Attribution 4.0 License. For more information, see https://creativecommons.org/licenses/by/4.0/

This article has been accepted for publication in a future issue of this journal, but has not been fully edited. Content may change prior to final publication. Citation information: DOI 10.1109/ACCESS.2021.3139761, IEEE Access

F. MISCELLANEOUS APPLICATIONS

Miscellaneous applications are classified as hybrid and multiple transmitters/receivers in Fig. 8. Fig. 8 (a) represents multiple transmitters, Fig. 8 (b) depicts multiple receivers, Fig. 8 (c) shows multiple transmitters and multiple receivers, and Fig. 8 (d) shows a hybrid application. The most important features of miscellaneous applications are given in Table 11. Based on this, it is aimed to show which application type is more suitable.

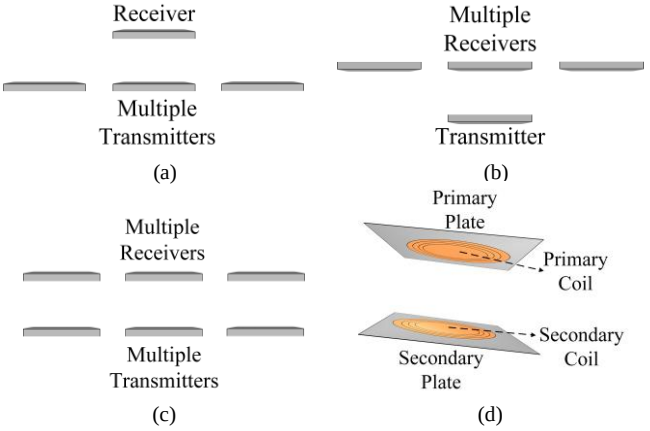

FIGURE 8. Miscellaneous applications: (a) Multiple receivers (b) multiple transmitters (c) multiple transmitters and multiple receivers (d) hybrid application.

1) HYBRID

Hybrid WPT technology is put forward to combine higher efficiency characteristics of IPT technology and specifically lower cost of CPT technology [22]. Power is transferred via electric and magnetic fields, simultaneously. The output power is equivalent to the sum of the IPT and CPT systems. Firstly, Lu *et al.* suggested a hybrid WPT system using double-sided LC compensation for high power applications [288] and double-sided LCL compensation for low power applications [62]. A hybrid coupler is proposed to utilize the full advantages of the resonant components [289]. Herein, the hybrid coupler provides unity current gain against the variation of impedance. A WPT system design is proposed to transfer power across the metal barrier by using capacitive and inductive couplings [290]. For the design, a two-plate coupler structure is used in the primary side to provide a current flow in the metal barrier, and a coil structure is utilized to generate a magnetic field for the power transfer. A method is suggested for capacitive power and data transmissions [291]. While the data is transferred via electric fields, the power is transferred via magnetic fields. A conjugate image theory is evaluated to obtain maximum transfer efficiency considering series and parallel compensation topologies [292, 293]. Luo *et al.* present a hybrid WPT system for railway applications [294, 295] and high power applications [296]. The authors improve the misalignment ability of the system. A hybrid WPT system is considered in wireless EV charging applications [297, 298]. Thus, it provides increased power level, improved efficiency, and reduced system cost. A converter called MagCap is proposed to provide bidirectional power transfer in hybrid WPT system [299]. Table 9 presents the performance comparison and Table 10 lists out the features of IPT, CPT and HWPT systems.

TABLE 9: Performance comparison of IPT, CPT and HWPT Systems [288].

System Type	Coupler Condition	Output Power	DC-DC Efficiency
CPT	Well Alignment	0.86 kW	93.04 %
	Horizontal Misalignment at 200 mm	0.69 kW	91.18 %
IPT	Well Alignment	1.95 kW	94.89 %
	Horizontal Misalignment at 200 mm	0.75 kW	91.68 %
HWPT	Well Alignment	2.84 kW	94.45 %
	Horizontal Misalignment at 200 mm	1.35 kW	91.49 %

TABLE 10: Comparison of IPT, CPT and HWPT systems.

System Type	Features
IPT	• Higher efficiency [22] • Higher power transfer ability in large-air gap applications [300] • Power transfer via electromagnetic field [19] • More suited to low voltage and high current applications [300]
CPT	• Lower cost and light weight [22] • Lower EMI and lower eddy-current loss [22] • Power transfer via electric field [62] • More suited to high voltage and low current applications [300] • Higher misalignment capability [300]
HWPT	• Better power scaling and power density [297] • Improved misalignment tolerance [294] • Reduced compensation components [288] • Reduced magnetic field emissions [297]

In summary, the hybrid coupler has the merits of IPT and CPT technologies. It combines both the good features by means of inductive coils and capacitive metal plates resonate together along with compensation components. Meanwhile, power transfer is provided. The hybrid system also utilizes specific advantages of electric and magnetic fields in resonant circuits to improve the power transfer.

2) MULTIPLE TRANSMITTERS/RECEIVERS

Multiple transmitters/receivers applications can be categorized as multiple transmitters with a single receiver, multiple receivers with a single transmitter, and multiple transmitters and multiple receivers in CPT systems. The CPT with multiple transmitters is proposed to improve the system efficiency [301]. According to that, the system efficiency can be enhanced by adding more transmitters. On the other side, CPT with multiple receivers are carried out with an optimum load determination [302-304], electric vehicle charging applications [305], conveyors [306], using mixed resonant topology [307], integrated circuits applications [216], and also portable device charging applications [171]. The main purpose is to charge multiple receivers at once with maximum efficiency using a single transmitter. The multiple transmitters and multiple receivers are used to increase the power transfer in CPT systems [308, 309]. In this concept, the optimum loads are determined to maximize the power transfer. In summary, it is expected that the focus will lie on charging multiple receivers simultaneously at once in CPT applications. The reasons for that can be stated as follows: reduced cost as it requires only an inverter, suitable to limited space applications, and shortened charging time for several outputs.

This work is licensed under a Creative Commons Attribution 4.0 License. For more information, see https://creativecommons.org/licenses/by/4.0/

This article has been accepted for publication in a future issue of this journal, but has not been fully edited. Content may change prior to final publication. Citation information: DOI 10.1109/ACCESS.2021.3139761, IEEE Access

TABLE 11: Miscellaneous applications.

Application Types	Output Power	Frequency	Efficiency	Compensation Types	Transfer Distance	Inverter Types	Coupler Types
Hybrid	121mW [293], 11 W [290], 100 W [62, 289], 150 W [299], 653 W [295], 1 kW [298], 1032 W [294], 1.1 kW [296], 2.84 kW [288]	100 kHz [293], 479 kHz [290], 630 kHz [299], 800 kHz [294, 296], 1 MHz [62, 288, 295, 298], 1.1 MHz [289]	41.6% [290], 73.6% [62], 77.8% [289], 87.7 % [295], 90.97 % [294], 91.9 % [296], >92% [299], 94.5% [288]	LCL-LCL [62, 289], LC-LC [288, 290, 293-296, 298, 299],	0.1 mm [299], 18 mm [62], 0-20 mm [290], 60 mm [295], 100 mm [294], 150 mm [288, 296]	Full-bridge [62, 288-290, 294-296], Three-leg inverter [298],	Four-plate [62, 288-290, 293-296, 298]
Multiple transmitters/ receivers	1.6 W [171], 4.64 W [309], 23 W [306], 260 W [307], 1.8 kW [305]	450 kHz [171], 500 kHz [307], 1 MHz [216, 305, 308], 2 MHz [306], 10 MHz [301, 302, 304, 309]	48.9% [304], 54% [171] , 79% [307], 80.7 % for N= 3 [302], 84.9% [301]	L [171, 309], LCL-LCL [305], CLC-CLC [307]	0.2 mm [307], 0.5 mm [171] , 2-3 mm [304], 10 cm [305]	Full-bridge [171, 305, 307], Push-pull converter [306]	Electric Field Repeater [171, 301, 302, 304-309],

This work is licensed under a Creative Commons Attribution 4.0 License. For more information, see https://creativecommons.org/licenses/by/4.0/

This article has been accepted for publication in a future issue of this journal, but has not been fully edited. Content may change prior to final publication. Citation information: DOI 10.1109/ACCESS.2021.3139761, IEEE Access

TABLE 12: Advantages and disadvantages of CPT applications.

Main Application Type	Sub-application Type	Advantage	Disadvantage
Safety	Foreign Object	• Simplified models for living and non-living foreign objects [182] • Reduced electric field emission [183] • More compact [184] • Easy to implement [186] • No extra sensing circuit [186] • Cost effective [186] • High efficiency [187]	• High occupied space [182, 187] • More influence of parasitic components [183] • Require extra circuitry [182, 186] • High computation burden [183] • Increased cost [182, 187] • Relatively low efficiency [184] • More sensitive to horizontal misalignment [184]
	Voltage Stress	• Reduced weight [191] • Cost effective [191] • Reduced electric field emission [35, 41, 192-200] • High efficiency [41, 190, 195, 196] • High tolerance to parameter variations [192, 193, 197, 198] • Low sensitivity to EMI [199], • Compact structure [200]	• Design complexity [41, 190] • Low efficiency [192] • Require extra circuitry [35, 41, 191, 193, 194, 200] • High occupied space [41, 195-197] • High computation burden [198, 199] • High resonant component count [199]
Consumer Electronics	Led Lighting	• Reduced size [202-204] • Cost effective [202-204, 209] • High efficiency [202-205] • Soft switching feature [205] • Increased power transfer capacity [206] • Easy to manufacture [209] • High tolerance to parameter variations [209]	• Limited transfer distance [202-205] • High occupied space [206] • Sensitive to size [206] • Increased cost [205, 207]
	Portable Device Charging	• Increased power transfer capacity [39, 60] • Low power consumption [60] • High tolerance to misalignments [210] • High tolerance to parameter variations [28, 213] • High efficiency [211, 212] • Reduced size [39, 212]	• Require extra circuitry [60] • High occupied space [210, 211] • More influence of parasitic components for multi-MHz operation [28, 212, 213] • Control complexity [28] • Increased cost [212]
	Integrated Circuits	• Cost effective [216-218] • Low power consumption [216, 218] • Increased power transfer capacity [217] • High efficiency [217]	• More influence of parasitic components [216] • Require extra circuitry [217, 218] • Control complexity [216, 217]
Transport	Electric Vehicle Static	• Increased power transfer capacity [42] • High efficiency [42, 43] • High tolerance to misalignments [220] • Reduced resonance inductance [43] • Compact structure [78] • Reduced electric field emission [105] • Reduced size [105]	• High resonant component count [42, 43, 220] • High occupied space [42, 43, 105] • Low efficiency [78] • Design complexity [105]
	Electric Vehicle Dynamic	• Reduced reactive power [80] • Reduced electric field emission [80, 234] • Cost effective [81] • Low sensitivity to EMI [81] • Reduced power pulsation [235]	• High resonant component count [80, 235] • High occupied space [81, 234, 235]
	Electric Vehicle Bidirectional	• Bidirectional power flow capability [241-245] • Compact structure [241] • Soft switching feature [242, 244] • High efficiency [242, 245] • High tolerance to parameter variations [243]	• Sensitive to horizontal misalignment [241] • Control complexity [242, 244] • High computation burden [243] • High resonant component count [244, 245]
	Electric Vehicle Robotics	• Reduced electric field emission [247] • High efficiency [247] • High operation time [248] • High tolerance to parameter variations [248]	• Sensitive to horizontal misalignment [247] • Design complexity [248]
	Drone (UAV)	• Reduced cross-coupling capacitance [113] • High efficiency [113, 255] • Reduced size [253] • High tolerance to misalignments [256] • Increased flight range [254]	• High occupied space [113, 256] • Relatively low efficiency [253] • High computation burden [255] • Require extra circuitry [254]
	Underwater	• High efficiency [262, 264] • High tolerance to misalignments [263] • Increased transfer distance [258, 263]	• Design complexity [262-264] • No insulation layer on the plate [262] • Increased cost [258, 263]

This work is licensed under a Creative Commons Attribution 4.0 License. For more information, see https://creativecommons.org/licenses/by/4.0/

This article has been accepted for publication in a future issue of this journal, but has not been fully edited. Content may change prior to final publication. Citation information: DOI 10.1109/ACCESS.2021.3139761, IEEE Access

TABLE 12: *(Continued.)* Advantages and disadvantages of CPT applications.

Main Application Type	Sub-application Type	Advantage	Disadvantage
Electric Machines	Synchronous Machines	• Easy to manufacture [59, 268] • Cost effective [59, 267, 268] • Compact structure [265] • No sensitive to speed [265, 266, 268] • High efficiency [267]	• Control complexity [59, 267, 268] • Requires extra circuitry [59, 268] • More influence of parasitic components [59, 265-268]
	Three-phase	• Increased power transfer capacity [32, 269, 271] • High efficiency [269, 271] • Reduced voltage stress [269] • High tolerance to parameter variations [270] • High frequency ability [270] • High tolerance to misalignments [271]	• More influence of parasitic components [32, 270] • Control complexity [269] • High occupied space [271]
	Rotary	• Increased power transfer capacity [114, 207] • Reduced voltage stress [114] • Increased transfer distance [114] • High tolerance to parameter variations [180, 270, 274] • Increased coupling capacitance [272, 310] • High efficiency [273]	• More influence of parasitic components [114, 270, 272, 310] • Control complexity [180, 273] • Increased power loss [207] • Requires extra circuitry [274]
Biomedical	-	• Power and data transfer ability [179, 276, 283] • Less sensitive to RF interference [179] • High efficiency [190, 276, 278, 279, 283, 287] • Low sensitive to flexion [190] • Reduced electric field emission [276] • Increased power transfer capacity [277, 278] • High tolerance to misalignments [279] • High tolerance to parameter variations [283, 287]	• Control complexity [179, 276-278, 283] • Large reciever plate [190] • Requires extra circuitry [277, 278] • Increased cost [277, 278] • High computation burden [279, 287]
Miscellaneous	Hybrid	• Increased power density [62, 296] • Increased power transfer capacity [288, 293, 296] • High efficiency [288, 294] • Reduced voltage and current stress [289] • Power transfer ability across the metal object [290] • High tolerance to misalignments [294, 295] • Mix switching ability [298]	• Relatively low efficiency [62, 289] • High occupied space [288, 294, 295] • Design complexity [290, 293, 296, 298] • Increased cost [294, 296]
	Multiple transmitters/ receivers	• Reduced charging time for receivers [171, 302, 304-307] • Charging multiple receivers at once [171, 302, 304-307] • Power maximization [304, 309] • Efficiency maximization [301, 302] • High tolerance to parameter variations [171, 305, 307] • High tolerance to misalignments [301, 306] • High mobility and range ability [301] • Reduced complexity [308]	• Control complexity [171] • Design complexity [301, 302, 304, 309] • Varying power transfer in multiple receivers [304] • Varying efficiency in multiple receivers [302] • Varying coupling in multiple receivers [171, 306] • Sensitive to horizontal misalignment [305] • High resonant component count [307] • High computation burden [308]

This work is licensed under a Creative Commons Attribution 4.0 License. For more information, see https://creativecommons.org/licenses/by/4.0/

This article has been accepted for publication in a future issue of this journal, but has not been fully edited. Content may change prior to final publication. Citation information: DOI 10.1109/ACCESS.2021.3139761, IEEE Access

G. CHALLENGES OF CPT APPLICATIONS

1) VARIABLE LOADS

The fundamental challenge of CPT technology is the low coupling capacitance, specifically transport applications. This makes it hard enough to work efficiently at high power. Hence, compensation topologies are adopted to address the low coupling capacitance, mainly at a fixed load. However, the variable loads create crucial problems such as low efficiency and variable coupling capacitance. For this reason, Su et al. [307] proposed a hybrid compensation topology formed of a π-CLC on the primary side to increase the voltage of the coupling and T-CLC on the secondary side to provide constant output current against load variations for multiple receiver applications. Kline et al. [28] suggested an automatic frequency and duty cycle control method to keep maximum efficiency during load and coupling variations for portable device charging applications. In summary, variable loads adversely affect the performance of the system and, therefore, they should be controlled properly to operate CPT system in efficient manner.

2) TRANSFER MEDIUM

Transfer medium plays a significant role in forming power transfer mechanism in WPT systems. Air is typically used as a medium in CPT applications. However, underwater charging applications utilize water as a medium [258]. The biggest challenge of underwater charging applications is the dynamic nature of the seawater or ocean, which varies the coupling [259]. Moreover, misalignment become a critical issue because of this reason. Thus, power transfer efficiency is significantly affected. In summary, transfer medium affects the behaviour of power transfer mechanism, especially in the feature of high power, high frequency and high electric field strength.

3) SAFETY ISSUES

Safety is a significant concern in capacitive power transfer technology. The safety issue is evaluated in CPT applications in terms of high voltage stress on metal plates, electric field emissions, and foreign object impact. Due to the integration of compensation topologies, the plate voltage can rise to kV level to success high power transfer. This kV level is much more dangerous for all living creatures. Thus, the capacitive coupler structure should be insulated properly based on the application type.

Electric field emissions should be compatible with the international standards, for instance electric field strength may be lower than 614 V/m at 1 MHz for human safety according to IEEE C95.1 standard [311]. The effects of electric field emissions are evaluated in terms of human safety for biomedical [190] and electric vehicle charging applications [191]. Furthermore, a six-plate capacitive coupler is proposed to reduce electric field emissions for EV charging applications [104]. Herein, the external two plates serve as shielding plates to keep the electric field in the safety range.

The effects of foreign objects, that is, living and non-living objects, can detrimentally affect the power transfer when they are near the transfer medium [187]. In summary, safety issues are an inevitable factor to design an appropriately operating CPT system.

VI. CONCLUSIONS AND SUGGESTIONS

The CPT technology has been a significant candidate among WPT technologies in recent years. In this paper, basic principles of CPT technology are reviewed in terms of compensation topologies, coupler structures, transfer distance, power electronic components and control methods. Then, CPT applications are classified according to different industrial topics such as safety, consumer electronics, transport, electric machines, biomedical and miscellaneous applications. These topics are categorized within themselves and evaluated considering their performance parameters (i.e., power level, operation frequency, system efficiency, transfer distance) along with compensation types, inverter types, and coupler types. It is concluded that CPT technology is preferred from low power biomedical applications to high power transport applications, low transfer distance integrated circuits applications to large transfer distance transport applications. In addition, compensation topologies vary from L compensation topology to high-order compensation topologies. Besides conventional coupler structures, different coupler designs are figured in CPT applications. It has been established that the coupler designs are mainly proposed to either reduce electric field emissions or increase coupling capacitances. Finally, the benefits, drawbacks and challenges of CPT applications are reviewed in detail. The benefits typically observed are cost effective, reduced size, high tolerance to misalignments, high tolerance to parameter variations, reduced electric field emission. The drawbacks mainly listed out are high occupied space, increased cost, requires extra circuitry, control complexity, and design complexity. The challenges are variable loads, adverse effect of transfer medium, and safety issues with high voltage stress, high electric field emissions, and foreign object impact. With the further development of CPT technology, it will become preferred in many application areas. For this reason, it is predicted that CPT applications will play an important role not only in academic research but also in industrial areas.

REFERENCES

[1] N. Tesla, "Apparatus for transmission of electrical energy. U.S. Patent 649621," May. 15, 1900.
[2] J. Schuler, "High-level electromagnetic energy transfer through a closed chest wall," *IRE International Conv. Rec. pt 9,* vol. 9, pp. 119-126, 1961.

This work is licensed under a Creative Commons Attribution 4.0 License. For more information, see https://creativecommons.org/licenses/by/4.0/

This article has been accepted for publication in a future issue of this journal, but has not been fully edited. Content may change prior to final publication. Citation information: DOI 10.1109/ACCESS.2021.3139761, IEEE Access

[3] W. C. Brown, "Experimental airborne microwave supported platform," Raytheon CO Burlington MA., 1965. [Online]. Available: https://apps.dtic.mil/sti/citations/AD0474925.

[4] P. E. Glaser, "Power from the sun: Its future," *Science*, vol. 162, no. 3856, pp. 857-861, 1968.

[5] S. D. Jarvis, J. Mukherjee, M. Perren, and S. J. Sweeney, "Development and characterisation of laser power converters for optical power transfer applications," *IET Optoelectronics*, vol. 8, no. 2, pp. 64-70, 2014.

[6] B. Hu *et al.*, "A long-distance high power microwave wireless power transmission system based on asymmetrical resonant magnetron and cyclotron-wave rectifier," *Energy Reports*, vol. 7, pp. 1154-1161, 2021.

[7] Z. J. Liao, S. Ma, Q. K. Feng, C. Xia, and D. Yu, "Frequency Splitting Elimination and Utilization in Magnetic Coupling Wireless Power Transfer Systems," *IEEE Transactions on Circuits and Systems I: Regular Papers*, vol. 68, no. 2, pp. 929-939, 2021.

[8] V. Z. Barsari, D. J. Thrimawithana, and G. A. Covic, "An Inductive Coupler Array for In-Motion Wireless Charging of Electric Vehicles," *IEEE Transactions on Power Electronics*, pp. 1-1, 2021.

[9] J. Kim and F. Bien, "Electric field coupling technique of wireless power transfer for electric vehicles," in *IEEE 2013 Tencon - Spring*, 17-19 April 2013 2013, pp. 267-271.

[10] A. Desmoort, Z. D. Grève, P. Dular, C. Geuzaine, and O. Deblecker, "Surface impedance boundary condition with circuit coupling for the 3D finite element modeling of wireless power transfer," in *2016 IEEE Conference on Electromagnetic Field Computation (CEFC)*, 13-16 Nov. 2016, pp. 1-1.

[11] Z. Popovic, "Near- and far-field wireless power transfer," in *2017 13th International Conference on Advanced Technologies, Systems and Services in Telecommunications (TELSIKS)*, 18-20 Oct. 2017 2017, pp. 3-6.

[12] C. Liu and A. P. Hu, "Steady state analysis of a capacitively coupled contactless power transfer system," in *2009 IEEE Energy Conversion Congress and Exposition*, 20-24 Sept. 2009 2009, pp. 3233-3238.

[13] C. Panchal, S. Stegen, and J. Lu, "Review of static and dynamic wireless electric vehicle charging system," *Engineering Science and Technology, an International Journal*, vol. 21, no. 5, pp. 922-937, 2018.

[14] S. Niu, H. Xu, Z. Sun, Z. Y. Shao, and L. Jian, "The state-of-the-arts of wireless electric vehicle charging via magnetic resonance: principles, standards and core technologies," *Renewable and Sustainable Energy Reviews*, vol. 114, p. 109302, 2019.

[15] Z. Bi, T. Kan, C. C. Mi, Y. Zhang, Z. Zhao, and G. A. Keoleian, "A review of wireless power transfer for electric vehicles: Prospects to enhance sustainable mobility," *Applied Energy*, vol. 179, pp. 413-425, 2016.

[16] P. Machura and Q. Li, "A critical review on wireless charging for electric vehicles," *Renewable and Sustainable Energy Reviews*, vol. 104, pp. 209-234, 2019.

[17] V. Shevchenko, O. Husev, R. Strzelecki, B. Pakhaliuk, N. Poliakov, and N. Strzelecka, "Compensation Topologies in IPT Systems: Standards, Requirements, Classification, Analysis, Comparison and Application," *IEEE Access*, vol. 7, pp. 120559-120580, 2019.

[18] C. Jiang, K. T. Chau, C. Liu, and C. H. T. Lee, "An Overview of Resonant Circuits for Wireless Power Transfer," *Energies*, vol. 10, no. 7, p. 894, 2017.

[19] Z. Zhang, H. Pang, A. Georgiadis, and C. Cecati, "Wireless Power Transfer—An Overview," *IEEE Transactions on Industrial Electronics*, vol. 66, no. 2, pp. 1044-1058, 2019.

[20] J. Dai and D. C. Ludois, "A Survey of Wireless Power Transfer and a Critical Comparison of Inductive and Capacitive Coupling for Small Gap Applications," *IEEE Transactions on Power Electronics*, vol. 30, no. 11, pp. 6017-6029, 2015.

[21] D. Rozario, N. A. Azeez, and S. S. Williamson, "Comprehensive review and comparative analysis of compensation networks for Capacitive Power Transfer systems," in *2016 IEEE 25th International Symposium on Industrial Electronics (ISIE)*, 8-10 June 2016, pp. 823-829.

[22] F. Lu, H. Zhang, and C. Mi, "A Review on the Recent Development of Capacitive Wireless Power Transfer Technology," *Energies*, vol. 10, no. 11, 2017.

[23] M. Z. bin Mustapa, S. Saat, Y. Yusof, and M. M. Shaari, "Capacitive power transfer in biomedical implantable device: a review," *Int J Pow Elec & Dri Syst*, vol. 10, no. 2, pp. 935-942, 2019.

[24] A. Z. Amanci, F. P. Dawson, and H. E. Ruda, "Galvanic isolation for high frequency applications using an integrated dielectric structure," in *2013 IEEE Energy Conversion Congress and Exposition*, 15-19 Sept. 2013, pp. 3726-3732.

[25] Z. Hu, M. Goodall, L. Zhao, Q. Zhu, and A. P. Hu, "A Comparative Study of Different Compensation Topologies for Capacitive Power Transfer," in *2020 IEEE PELS Workshop on Emerging Technologies: Wireless Power Transfer (WoW)*, 15-19 Nov. 2020 , pp. 389-394.

[26] C. Liu, A. P. Hu, G. A. Covic, and N. C. Nair, "Comparative Study of CCPT Systems With Two Different Inductor Tuning Positions," *IEEE Transactions on Power Electronics*, vol. 27, no. 1, pp. 294-306, 2012.

[27] B. Minnaert and N. Stevens, "Conjugate Image Theory Applied on Capacitive Wireless Power Transfer," *Energies*, vol. 10, no. 1, p. 46, 2017.

[28] M. Kline, I. Izyumin, B. Boser, and S. Sanders, "Capacitive power transfer for contactless charging," in *2011 Twenty-Sixth Annual IEEE Applied Power Electronics Conference and Exposition (APEC)*, 6-11 March 2011, pp. 1398-1404.

[29] S. K. Mishra, R. Adda, S. Sekhar, A. Joshi, and A. K. Rathore, "Power transfer using portable surfaces in capacitively coupled power transfer technology," *IET Power Electronics*, vol. 9, no. 5, pp. 997-1008, 2016.

[30] W. Zhou, Y.-G. Su, S.-Y. Xie, L. Chen, X. Dai, and Y.-M. Zhao, "An Interference Isolation Method for Wireless Power and Signal Parallel Transmissions on CPT Systems," *J. Power Electron.*, vol. 17, pp. 305–313, 2017.

[31] M. Antivachis, M. Kasper, D. Bortis, and J. W. Kolar, "Analysis of capacitive power transfer GaN ISOP multi-cell DC/DC converter systems for single-phase telecom power supply modules," in *IECON 2016 - 42nd Annual Conference of the IEEE Industrial Electronics Society*, 23-26 Oct. 2016, pp. 1280-1287.

[32] J. Dai, S. S. Hagen, and D. C. Ludois, "Linear motion system cable elimination via multiphase capacitive power transfer through sliding journal bearings," in *2017 IEEE Applied Power Electronics Conference and Exposition (APEC)*, 26-30 March 2017 2017, pp. 2157-2164.

[33] D. Rozario, V. K. Pathipati, A. Ram, N. A. Azeez, and S. S. Williamson, "Modified resonant converters for contactless capacitive power transfer systems used in EV charging applications," in *IECON 2016 - 42nd Annual Conference of the IEEE Industrial Electronics Society*, 23-26 Oct. 2016, pp. 4510-4517.

[34] D. Rozario, N. A. Azeez, and S. S. Williamson, "A modified resonant converter for wireless capacitive power transfer systems used in battery charging applications," in *2016 IEEE Transportation Electrification Conference and Expo (ITEC)*, 27-29 June 2016, pp. 1-6.

[35] S. Choi and H. Choi, "Capacitive wireless power transfer system with double matching transformers for reduced stress and extended ZVS range," in *2015 IEEE International Telecommunications Energy Conference (INTELEC)*, 18-22 Oct. 2015, pp. 1-6.

[36] H. Fnato, Y. Chiku, and K. Harakawa, "Wireless power distribution with capacitive coupling excited by switched mode active negative capacitor," in *2010 International Conference on Electrical Machines and Systems*, 10-13 Oct. 2010, pp. 117-122.

[37] H. Funato, H. Kobayashi, and T. Kitabayashi, "Analysis of transfer power of capacitive power transfer system," in *2013*

This work is licensed under a Creative Commons Attribution 4.0 License. For more information, see https://creativecommons.org/licenses/by/4.0/

This article has been accepted for publication in a future issue of this journal, but has not been fully edited. Content may change prior to final publication. Citation information: DOI 10.1109/ACCESS.2021.3139761, IEEE Access

IEEE 10th International Conference on Power Electronics and Drive Systems (PEDS), 22-25 April 2013, pp. 1015-1020.

[38] H. Kobayashi, H. Funato, and Y. Chiku, "Enhancement of transfer power of Capacitive Power Transfer system using cascaded One Pulse Switching Active Capacitor(C-OPSAC) with three-level operation," in *Proceedings of The 7th International Power Electronics and Motion Control Conference*, 2-5 June 2012, vol. 2, pp. 884-888.

[39] M. P. Theodoridis, "Effective Capacitive Power Transfer," *IEEE Transactions on Power Electronics*, vol. 27, no. 12, pp. 4906-4913, 2012.

[40] H. Zhang, F. Lu, H. Hofmann, W. Liu, and C. C. Mi, "A Four-Plate Compact Capacitive Coupler Design and LCL-Compensated Topology for Capacitive Power Transfer in Electric Vehicle Charging Application," *IEEE Transactions on Power Electronics*, vol. 31, no. 12, pp. 8541-8551, 2016.

[41] Y.-G. Su, W. Zhou, Z.-H. Wang, X.-Y. Wu, and X.-D. Qing, "Parameter design method for capacitive power and signal transfer system based on multi-objective optimisation algorithm," *IET Power Electronics*, vol. 12, no. 10, pp. 2650-2659, 2019.

[42] F. Lu, H. Zhang, H. Hofmann, and C. Mi, "A Double-Sided LCLC-Compensated Capacitive Power Transfer System for Electric Vehicle Charging," *IEEE Transactions on Power Electronics*, vol. 30, no. 11, pp. 6011-6014, 2015.

[43] F. Lu, H. Zhang, H. Hofmann, and C. Mi, "A CLLC-compensated high power and large air-gap capacitive power transfer system for electric vehicle charging applications," in *2016 IEEE Applied Power Electronics Conference and Exposition (APEC)*, 20-24 March 2016, pp. 1721-1725.

[44] A. Reatti, S. Musumeci, and F. Corti, "Frequency Analysis and Comparison of LCCL and CLLC Compensations for Capacitive Wireless Power Transfer," in *2020 AEIT International Conference of Electrical and Electronic Technologies for Automotive (AEIT AUTOMOTIVE)*, 18-20 Nov. 2020, pp. 1-6.

[45] S. Ning, J. Yang, Q. Zhu, M. Su, R. Tan, and Y. Liu, "Comparative Analysis of LCL, LCLC, CLLC Compensation Networks for Capacitive Power Transfer," in *2018 IEEE 4th Southern Power Electronics Conference (SPEC)*, 10-13 Dec. 2018, pp. 1-6.

[46] M. Kusunoki, D. Obara, and M. Masuda, "Wireless power transfer via electric field resonance coupling," in *2014 Asia-Pacific Microwave Conference*, 4-7 Nov. 2014, pp. 1360-1362.

[47] H. Zhang, F. Lu, H. Hofmann, and C. Mi, "A loosely coupled capacitive power transfer system with LC compensation circuit topology," in *2016 IEEE Energy Conversion Congress and Exposition (ECCE)*, 18-22 Sept. 2016, pp. 1-5.

[48] F. Lu, H. Zhang, H. Hofmann, and C. C. Mi, "A Double-Sided LC-Compensation Circuit for Loosely Coupled Capacitive Power Transfer," *IEEE Transactions on Power Electronics*, vol. 33, no. 2, pp. 1633-1643, 2018.

[49] S.-Y. Xie, Y.-G. Su, W. Zhou, Y.-M. Zhao, and X. Dai, "An Electric-Field Coupled Power Transfer System with a Double-sided LC Network," *Journal of Power Electronics*, vol. 18, no. 1, pp. 289–299, Jan. 2018.

[50] H. Zhang and F. Lu, "An Improved Design Methodology of the Double-Sided LC-Compensated CPT System Considering the Inductance Detuning," *IEEE Transactions on Power Electronics*, vol. 34, no. 11, pp. 11396-11406, 2019.

[51] H. Zhang, C. Zhu, and F. Lu, "Long-Distance and High power Capacitive Power Transfer based on the Double-Sided LC Compensation: Analysis and Design," in *2019 IEEE Transportation Electrification Conference and Expo (ITEC)*, 19-21 June 2019, pp. 1-5.

[52] Y. Yao, T. Zhuang, J. Mai, Y. Wang, X. Liu, and D. Xu, "A Particle Swarm Optimization (PSO)-based Tuning Method for LC/CL-compensated Capacitive Power Transfer Systems," in *2020 23rd International Conference on Electrical Machines and Systems (ICEMS)*, 24-27 Nov. 2020, pp. 395-400.

[53] S. Sinha, A. Kumar, B. Regensburger, and K. K. Afridi, "Design of High efficiency Matching Networks for Capacitive Wireless Power Transfer Systems," *IEEE Journal of Emerging and Selected Topics in Power Electronics*, pp. 1-1, 2020.

[54] F. Gao, Z. Wang, J. Deng, S. Wang, and Y. Wang, "A Comparison Study of Compensation Topologies for Capacitive Power Transfer," in *2019 IEEE 28th International Symposium on Industrial Electronics (ISIE)*, 12-14 June 2019, pp. 691-696.

[55] B. Luo, R. Mai, L. Guo, D. Wu, and Z. He, "LC–CLC compensation topology for capacitive power transfer system to improve misalignment performance," *IET Power Electronics*, vol. 12, no. 10, pp. 2626-2633, 2019.

[56] X. Wu, Y. Su, X. Hou, X. Qing, and X. Dai, "Study on load adaptation of capacitive power transfer system with a four-plate compact capacitive coupler," *Electrical Engineering*, vol. 101, no. 3, pp. 733-742, 2019.

[57] V. Vu, M. Dahidah, V. Pickert, and V. Phan, "An Improved LCL-L Compensation Topology for Capacitive Power Transfer in Electric Vehicle Charging," *IEEE Access*, vol. 8, pp. 27757-27768, 2020.

[58] S. Sinha, A. Kumar, S. Pervaiz, B. Regensburger, and K. K. Afridi, "Design of efficient matching networks for capacitive wireless power transfer systems," in *2016 IEEE 17th Workshop on Control and Modeling for Power Electronics (COMPEL)*, 27-30 June 2016, pp. 1-7.

[59] J. Dai, S. Hagen, D. C. Ludois, and I. P. Brown, "Synchronous Generator Brushless Field Excitation and Voltage Regulation via Capacitive Coupling Through Journal Bearings," *IEEE Transactions on Industry Applications*, vol. 53, no. 4, pp. 3317-3326, 2017.

[60] K. H. Yi, "6.78 MHz capacitive coupling wireless power transfer system," *Journal of Power Electronics*, vol. 15, no. 4, pp. 987-993, 2015.

[61] A.-S. M, E. A. Hussien, A. S, and C. A, "Comparative Study of Compensation Circuit Topologies in 6.6kW Capacitive Power Transfer System," in *2019 11th International Symposium on Advanced Topics in Electrical Engineering (ATEE)*, 28-30 March 2019, pp. 1-6.

[62] F. Lu, H. Zhang, H. Hofmann, and C. Mi, "An inductive and capacitive integrated coupler and its LCL compensation circuit design for wireless power transfer," in *2016 IEEE Energy Conversion Congress and Exposition (ECCE)*, 18-22 Sept. 2016, pp. 1-5.

[63] L. Huang, A. P. Hu, A. K. Swain, and Y. Su, "Z-Impedance Compensation for Wireless Power Transfer Based on Electric Field," *IEEE Transactions on Power Electronics*, vol. 31, no. 11, pp. 7556-7563, 2016.

[64] Y. Su, Y. Zhao, A. P. Hu, Z. Wang, C. Tang, and Y. Sun, "An F-Type Compensated Capacitive Power Transfer System Allowing for Sudden Change of Pickup," *IEEE Journal of Emerging and Selected Topics in Power Electronics*, vol. 7, no. 2, pp. 1084-1093, 2019.

[65] W. Zhang and C. C. Mi, "Compensation Topologies of High power Wireless Power Transfer Systems," *IEEE Transactions on Vehicular Technology*, vol. 65, no. 6, pp. 4768-4778, 2016.

[66] N. Islam, A. Mohammad, and Q. Nafees, "A comprehensive overview on the development of compensation topologies for capacitive power transfer system," *Electrical and Electronic Engineering.*, vol. 9, no. 1, pp. 9-16, 2019.

[67] L. Li, Z. Wang, F. Gao, S. Wang, and J. Deng, "A family of compensation topologies for capacitive power transfer converters for wireless electric vehicle charger," *Applied Energy*, vol. 260, p. 114156, 2020.

[68] K. Suzuki, K. Hata, T. Imura, and Y. Hori, "SS and SP Topology Analysis for Capacitive Power Transfer with Resonance Coupling Based on Power Factor Consideration," in *IECON 2018 - 44th Annual Conference of the IEEE Industrial Electronics Society*, 21-23 Oct. 2018, pp. 4846-4851.

[69] A. C. M. d. Queiroz, "Capacitively coupled multiple resonance networks," in *Proceedings of the 2003 International Symposium on Circuits and Systems, 2003. ISCAS '03.*, 25-28 May 2003, vol. 1, pp. I-I.

This work is licensed under a Creative Commons Attribution 4.0 License. For more information, see https://creativecommons.org/licenses/by/4.0/

This article has been accepted for publication in a future issue of this journal, but has not been fully edited. Content may change prior to final publication. Citation information: DOI 10.1109/ACCESS.2021.3139761, IEEE Access

[70] D. Bui, "Study on Impedance Matching Techniques for Capacitive Power Transfer," MSc. Thesis, The University of Auckland, Auckland, New Zealand, 2018.

[71] K. Yi, "Capacitive Coupling Wireless Power Transfer with Quasi-LLC Resonant Converter Using Electric Vehicles Windows," *Electronics*, vol. 9, p. 676, 2020.

[72] A. Pickering, R. Hull, J. Hawk, A. Phani, C. Van Neste, and T. Thundat, "Quasi-wireless surface power and control for battery-free robotics," *Wireless Power Transfer*, vol. 2, no. 2, p. 134, 2015.

[73] M. R. Coultis, J. Dean, C. Murray, and C. W. V. Neste, "Capacitive Powered Sensor Network Using a Series Transmission Line," in *2020 IEEE PELS Workshop on Emerging Technologies: Wireless Power Transfer (WoW)*, 15-19 Nov. 2020, pp. 84-87.

[74] A.-S. M, A.-C. S, A.-Q. M, and C. A, "A New Analytical Formula for Coupling Capacitance of Unipolar Capacitive Coupler in Wireless Power Transfer System," in *2019 11th International Symposium on Advanced Topics in Electrical Engineering (ATEE)*, 28-30 March 2019, pp. 1-6.

[75] H. Zhang and F. Lu, "A 2m Quasi-Wireless Capacitive Power Transfer (CPT) System Using Earth Ground as the Current-Returning Path," in *2019 IEEE Energy Conversion Congress and Exposition (ECCE)*, 29 Sept.-3 Oct. 2019, pp. 5740-5743.

[76] C. Van Neste *et al.*, "Single-contact transmission for the quasi-wireless delivery of power over large surfaces," *Wireless Power Transfer*, vol. 1, no. 2, pp. 75-82, 2014.

[77] C. W. V. Neste, A. Phani, R. Hull, J. E. Hawk, and T. Thundat, "Quasi-wireless capacitive energy transfer for the dynamic charging of personal mobility vehicles," in *2016 IEEE PELS Workshop on Emerging Technologies: Wireless Power Transfer (WoW)*, 4-6 Oct. 2016, pp. 196-199.

[78] F. Lu, H. Zhang, and C. Mi, "A Two-Plate Capacitive Wireless Power Transfer System for Electric Vehicle Charging Applications," *IEEE Transactions on Power Electronics*, vol. 33, no. 2, pp. 964-969, 2018.

[79] M. Al-Saadi, A. Al-Gizi, S. Ahmed, S. Al-Chlaihawi, and A. Craciunescu, "Analysis of Charge Plate Configurations in Unipolar Capacitive Power Transfer System for the Electric Vehicles Batteries Charging," *Procedia Manufacturing*, vol. 32, pp. 418-425, 2019.

[80] S. Li, Z. Liu, H. Zhao, L. Zhu, C. Shuai, and Z. Chen, "Wireless Power Transfer by Electric Field Resonance and Its Application in Dynamic Charging," *IEEE Transactions on Industrial Electronics*, vol. 63, no. 10, pp. 6602-6612, 2016.

[81] N. Sakai, D. Itokazu, Y. Suzuki, S. Sakihara, and T. Ohira, "One-kilowatt capacitive Power Transfer via wheels of a compact Electric Vehicle," in *2016 IEEE Wireless Power Transfer Conference (WPTC)*, 5-6 May 2016, pp. 1-3.

[82] S. V. d. C. d. Freitas, F. C. Domingos, R. Mirzavand, and P. Mousavi, "Contactless Power Transfer Using Capacitive Resonant Single-Conductor Structure," in *2018 IEEE Wireless Power Transfer Conference (WPTC)*, 3-7 June 2018, pp. 1-4.

[83] S. V. d. C. d. Freitas, "Capacitive Resonant Single-Conductor System for Wireless Power Transfer to Devices with Metallic Embodiments," MSc. Thesis, University of Alberta, Edmonton, Canada, 2019.

[84] X. Shu and B. Zhang, "Single-Wire Electric-Field Coupling Power Transmission Using Nonlinear Parity-Time-Symmetric Model with Coupled-Mode Theory," *Energies*, vol. 11, no. 3, p. 532, 2018.

[85] L. J. Zou, Q. Zhu, C. W. V. Neste, and A. P. Hu, "Modelling Single-Wire Capacitive Power Transfer System with Strong Coupling to Ground," *IEEE Journal of Emerging and Selected Topics in Power Electronics*, pp. 1-1, 2019.

[86] L. J. Zou, A. P. Hu, and Y. Su, "A single-wire capacitive power transfer system with large coupling alignment tolerance," in *2017 IEEE PELS Workshop on Emerging Technologies: Wireless Power Transfer (WoW)*, 20-22 May 2017, pp. 93-98.

[87] L. J. Zou, A. P. Hu, G. Wang, and Y. Su, "Study of Electric and Magnetic Field Distributions between Two Coupled Plates for Capacitive Power Transfer by Simulation and Practical Measurements," in *2020 IEEE PELS Workshop on Emerging Technologies: Wireless Power Transfer (WoW)*, 15-19 Nov. 2020, pp. 395-399.

[88] D. Rozario, N. A. Azeez, and S. S. Williamson, "Analysis and design of coupling capacitors for contactless capacitive power transfer systems," in *2016 IEEE Transportation Electrification Conference and Expo (ITEC)*, 27-29 June 2016, pp. 1-7.

[89] Q. Zhu, L. J. Zou, M. Su, and A. P. Hu, "Four-plate capacitive power transfer system with different grounding connections," *International Journal of Electrical Power & Energy Systems*, vol. 115, p. 105494, 2020.

[90] C. Mi, "High power capacitive power transfer for electric vehicle charging applications," in *2015 6th International Conference on Power Electronics Systems and Applications (PESA)*, 15-17 Dec. 2015, pp. 1-4.

[91] Q. Zhu, S. Zang, L. J. Zou, G. Zhang, M. Su, and A. P. Hu, "Study of coupling configurations of capacitive power transfer system with four metal plates," *Wireless Power Transfer*, vol. 6, no. 2, pp. 97-112, 2019.

[92] Y. Liu, C. Li, Y. Chi, Y. Lee, Q. Yuan, and Q. Chen, "Novel design of pixelated charging electrodes for capacitive power transfer," in *2017 IEEE Wireless Power Transfer Conference (WPTC)*, 10-12 May 2017 2017, pp. 1-4.

[93] T. Komaru and H. Akita, "Positional characteristics of capacitive power transfer as a resonance coupling system," in *2013 IEEE Wireless Power Transfer (WPT)*, 15-16 May 2013 2013, pp. 218-221.

[94] A. Reatti, L. Pugi, F. Corti, and F. Grasso, "Effect of Misalignment in a Four Plates Capacitive Wireless Power Transfer System," in *2020 IEEE International Conference on Environment and Electrical Engineering and 2020 IEEE Industrial and Commercial Power Systems Europe (EEEIC / I&CPS Europe)*, 9-12 June 2020, pp. 1-4.

[95] X. Wu, Y. Su, A. P. Hu, X. Qing, and X. Hou, "Multi-Objective Parameter Optimization of a Four-Plate Capacitive Power Transfer System," *IEEE Journal of Emerging and Selected Topics in Power Electronics*, pp. 1-1, 2020.

[96] C. Liu, A. P. Hu, and M. Budhia, "A generalized coupling model for Capacitive Power Transfer systems," in *IECON 2010 - 36th Annual Conference on IEEE Industrial Electronics Society*, 7-10 Nov. 2010, pp. 274-279.

[97] L. Huang and A. P. Hu, "Defining the mutual coupling of capacitive power transfer for wireless power transfer," *Electronics Letters*, vol. 51, no. 22, pp. 1806-1807, 2015.

[98] L. Huang, A. P. Hu, A. K. Swain, and Y. Su, "Accurate steady-state modeling of capacitive-coupling interface of capacitive power transfer systems with cross-coupling," *Wireless Power Transfer*, vol. 3, no. 1, pp. 53-62, 2016.

[99] S. Wang, J. Liang, and M. Fu, "Analysis and Design of Capacitive Power Transfer Systems Based on Induced Voltage Source Model," *IEEE Transactions on Power Electronics*, vol. 35, no. 10, pp. 10532-10541, 2020.

[100] S. Wang, J. Liang, H. Wang, and M. Fu, "An Induced Voltage Source Model for Capacitive Power Transfer," in *2020 IEEE Applied Power Electronics Conference and Exposition (APEC)*, 15-19 March 2020, pp. 846-851.

[101] Y. Wu, Q. Chen, X. Ren, and Z. Zhang, "Efficiency Optimization Based Parameter Design Method for the Capacitive Power Transfer System," *IEEE Transactions on Power Electronics*, pp. 1-1, 2021.

[102] B. Liu, R. Ren, F. F. Wang, D. Costinett, and Z. Zhang, "Capacitive Coupling in EMI Filters Containing T-Shaped Joint: Mechanism, Effects, and Mitigation," *IEEE Transactions on Power Electronics*, vol. 35, no. 3, pp. 2534-2547, 2020.

[103] E. Abramov, I. Zeltser, and M. M. Peretz, "A network-based approach for modeling resonant capacitive wireless power transfer systems," *CPSS Transactions on Power Electronics and Applications*, vol. 4, no. 1, pp. 19-29, 2019.

[104] H. Zhang, F. Lu, H. Hofmann, W. Liu, and C. C. Mi, "Six-Plate Capacitive Coupler to Reduce Electric Field Emission in Large Air-Gap Capacitive Power Transfer," *IEEE Transactions on Power Electronics*, vol. 33, no. 1, pp. 665-675, 2018.

This work is licensed under a Creative Commons Attribution 4.0 License. For more information, see https://creativecommons.org/licenses/by/4.0/

This article has been accepted for publication in a future issue of this journal, but has not been fully edited. Content may change prior to final publication. Citation information: DOI 10.1109/ACCESS.2021.3139761, IEEE Access

[105] K. Doubleday *et al.*, "Multi-objective optimization of capacitive wireless power transfer systems for electric vehicle charging," in *2017 IEEE 18th Workshop on Control and Modeling for Power Electronics (COMPEL)*, 9-12 July 2017, pp. 1-8.

[106] A. Muharam *et al.*, "An Improved Ground Stability in Shielded Capacitive Wireless Power Transfer," in *2019 International Conference on Sustainable Energy Engineering and Application (ICSEEA)*, 23-24 Oct. 2019, pp. 1-5.

[107] A. Muharam, M. Masuda, R. Hattori, and A. Hapid, "Compactly Assembled Transmitting and Receiving Modules with Shield for Capacitive Coupling Power Transfer System," in *2019 IEEE PELS Workshop on Emerging Technologies: Wireless Power Transfer (WoW)*, 18-21 June 2019, pp. 257-262.

[108] A. Muharam, S. Ahmad, and R. Hattori, "Scaling-Factor and Design Guidelines for Shielded-Capacitive Power Transfer," *Energies*, vol. 13, no. 16, p. 4240, 2020.

[109] A. Clements, R. McDonald, M. Ahmadi, and T. Johnson, "Design Method for Differentially-Driven Capacitive Wireless Power Transfer Systems," in *2020 IEEE Wireless Power Transfer Conference (WPTC)*, 15-19 Nov. 2020, pp. 292-295.

[110] H. Zhang, F. Lu, H. Hofmann, and C. Mi, "An LC compensated electric field repeater for long distance capacitive power transfer," in *2016 IEEE Energy Conversion Congress and Exposition (ECCE)*, 18-22 Sept. 2016, pp. 1-5.

[111] J. Dai and D. C. Ludois, "Wireless electric vehicle charging via capacitive power transfer through a conformal bumper," in *2015 IEEE Applied Power Electronics Conference and Exposition (APEC)*, 15-19 March 2015, pp. 3307-3313.

[112] M. Miyazaki, S. Abe, Y. Suzuki, N. Sakai, T. Ohira, and M. Sugino, "Sandwiched parallel plate capacitive coupler for wireless power transfer tolerant of electrode displacement," in *2017 IEEE MTT-S International Conference on Microwaves for Intelligent Mobility (ICMIM)*, 19-21 March 2017, pp. 29-32.

[113] C. Park *et al.*, "Separated Circular Capacitive Coupler for Reducing Cross-Coupling Capacitance in Drone Wireless Power Transfer System," *IEEE Transactions on Microwave Theory and Techniques*, vol. 68, no. 9, pp. 3978-3985, 2020.

[114] X. Wu, Y. Su, A. P. Hu, L. J. Zou, and Z. Liu, "A Sleeve-Type Capacitive Power Transfer System With Different Coupling Arrangements for Rotary Application," *IEEE Access*, vol. 8, pp. 69148-69159, 2020.

[115] X. Gao *et al.*, "Design and Analysis of a New Hybrid Wireless Power Transfer System With a Space-Saving Coupler Structure," *IEEE Transactions on Power Electronics*, vol. 36, no. 5, pp. 5069-5081, 2021.

[116] B. Ge, D. C. Ludois, and R. Perez, "The use of dielectric coatings in capacitive power transfer systems," in *2014 IEEE Energy Conversion Congress and Exposition (ECCE)*, 14-18 Sept. 2014, pp. 2193-2199.

[117] K. Yi, J. Jung, B. Lee, and Y. You, "Study on a capacitive coupling wireless power transfer with electric vehicle's dielectric substrates for charging an electric vehicle," in *2017 19th European Conference on Power Electronics and Applications (EPE'17 ECCE Europe)*, 11-14 Sept. 2017, pp. P.1-P.7.

[118] D. Vincent and S. S. Williamson, "Role of Dielectrics in the Capacitive Wireless Power Transfer System," in *2020 IEEE International Conference on Industrial Technology (ICIT)*, 26-28 Feb. 2020, pp. 1217-1222.

[119] L. J. Zou and A. P. Hu, "A Contactless Single-Wire CPT (Capacitive Power Transfer) Power Supply for Driving a Variable Message Sign," in *2018 IEEE PELS Workshop on Emerging Technologies: Wireless Power Transfer (Wow)*, 3-7 June 2018, pp. 1-5.

[120] A.-S. M, A.-Q. M, A.-B. L, A.-O. A, and C. A, "A Comparative Study of Capacitive Couplers in Wireless Power Transfer," in *2018 International Symposium on Fundamentals of Electrical Engineering (ISFEE)*, 1-3 Nov. 2018, pp. 1-6.

[121] B. Ge and D. C. Ludois, "Analytical Determination of Capacitance and Conductance Coupling Matrices for Assisting the Design of Capacitively Coupled Planar Power Conversion Apparatuses," *IEEE Journal of Emerging and Selected Topics in Power Electronics*, pp. 1-1, 2020.

[122] F. Lu, H. Zhang, H. Hofmann, and C. Mi, "A Double-Sided *LCLC*-Compensated Capacitive Power Transfer System for Electric Vehicle Charging," *IEEE Transactions on Power Electronics*, vol. 30, no. 11, pp. 6011-6014, 2015.

[123] S. Maji, S. Sinha, and K. K. Afridi, "Theoretical Limits of Power Transfer in Capacitive Wireless Charging Systems," in *2020 IEEE 21st Workshop on Control and Modeling for Power Electronics (COMPEL)*, 9-12 Nov. 2020, pp. 1-6.

[124] D. Vincent and S. S. Williamson, "Modeling, Analysis, Design, and Verification of a Reduced Model Capacitive Power Transfer Based Wireless Charging System," in *2020 IEEE Energy Conversion Congress and Exposition (ECCE)*, 11-15 Oct. 2020, pp. 4118-4123.

[125] K. Amano, H. Funato, and J. Haruna, "Proposal of isolated outlet socket and plug using capacitive power transfer," in *2017 IEEE 3rd International Future Energy Electronics Conference and ECCE Asia (IFEEC 2017 - ECCE Asia)*, 3-7 June 2017, pp. 648-653.

[126] H. Funato, K. Amano, T. Hatsumi, and J. Haruna, "Transfer Power Analysis of Capacitively Isolated Outlet and Plug (CapIsOP) using Series Resonance," in *2018 International Power Electronics Conference (IPEC-Niigata 2018 -ECCE Asia)*, 20-24 May 2018, pp. 94-99.

[127] A. Muharam, T. M. Mostafa, A. Nugroho, and R. Hattori, "Power Loss Analysis of Inverter with and without Transformer for Capacitive Power Transfer," in *2018 IEEE Wireless Power Transfer Conference (WPTC)*, 3-7 June 2018, pp. 1-4.

[128] S. Shekhar, S. Mishra, and A. Joshi, "A utility interfaced half-bridge based capacitively coupled power transfer circuit with automatic frequency control," in *2013 IEEE Energy Conversion Congress and Exposition*, 15-19 Sept. 2013, pp. 1598-1602.

[129] T. C. Tin, P. La, and S. Choi, "A Novel Asymmetric Half-Bridge Inverter for Capacitive Wireless Power Transfer," in *2019 International Symposium on Electrical and Electronics Engineering (ISEE)*, 10-12 Oct. 2019, pp. 194-198.

[130] T. M. Mostafa, D. Bui, A. Muharam, A. P. Hu, and R. Hattori, "Load Effect Analysis and Maximum Power Transfer Tracking of CPT System," *IEEE Transactions on Circuits and Systems I: Regular Papers*, vol. 67, no. 8, pp. 2836-2848, 2020.

[131] K. Kroics, J. Voitkans, and B. Pakhaliuk, "Design Considerations of GaN Transistor Based Capacitive Wireless Power Transfer System," in *2018 IEEE 18th International Power Electronics and Motion Control Conference (PEMC)*, 26-30 Aug. 2018, pp. 66-71.

[132] S. Sinha, B. Regensburger, A. Kumar, and K. Afridi, "A very-high power-transfer-density GaN-based capacitive wireless power transfer system," in *2017 IEEE 5th Workshop on Wide Bandgap Power Devices and Applications (WiPDA)*, 30 Oct.-1 Nov. 2017, pp. 360-365.

[133] A. Kumar, S. Sinha, and K. K. Afridi, "A high frequency inverter architecture for providing variable compensation in wireless power transfer systems," in *2018 IEEE Applied Power Electronics Conference and Exposition (APEC)*, 4-8 March 2018, pp. 3154-3159.

[134] P. Colantonio, F. Giannini, R. Giofre, M. A. Y. Medina, D. Schreurs, and B. Nauwelaers, "High frequency class E design methodologies," in *European Gallium Arsenide and Other Semiconductor Application Symposium, GAAS 2005*, 3-4 Oct. 2005, pp. 329-332.

[135] D. Rattanarungngam, K. Phaebua, and T. Lertwiriyaprapa, "Power control unit for E-class power oscillator of 6.78 MHz wireless power transfer," in *2017 International Symposium on Antennas and Propagation (ISAP)*, 30 Oct.-2 Nov. 2017, pp. 1-2.

[136] Y. Yusop, S. Saat, H. Husin, S. K. Nguang, and I. Hindustan, "Analysis of Class-E LC Capacitive Power Transfer System," *Energy Procedia*, vol. 100, pp. 287-290, 2016.

[137] K. Kamarudin, S. Saat, and Y. Yusmarnita, "Analysis and design of wireless power transfer: A capacitive based method,"

This work is licensed under a Creative Commons Attribution 4.0 License. For more information, see https://creativecommons.org/licenses/by/4.0/

This article has been accepted for publication in a future issue of this journal, but has not been fully edited. Content may change prior to final publication. Citation information: DOI 10.1109/ACCESS.2021.3139761, IEEE Access

in *2014 IEEE Symposium on Industrial Electronics & Applications (ISIEA)*, 28 Sept.-1 Oct. 2014, pp. 136-141.

[138] F. Rahman, S. Saat, Y. Yusop, H. Husin, and Y. Aziz, "Design and analysis of capacitive power transfer system with and without the impedance matching circuit," *International Journal of Power Electronics and Drive Systems*, vol. 8, no. 3, p. 1260, 2017.

[139] Y. Yusop, S. Saat, S. K. Nguang, H. Husin, and Z. Ghani, "Design of Capacitive Power Transfer Using a Class-E Resonant Inverter," *Journal of Power Electronics*, vol. 16, no. 5, pp. 1678–1688, 2016.

[140] S. Saat, Y. Yusop, Z. Ghani, H. Husin, and F. Rahman, "A Modified Class-Eπ1b for Capacitive Power Transfer System," *Journal of Telecommunication, Electronic and Computer Engineering (JTEC)*, vol. 9, no. 2-13, pp. 87-92, 2017.

[141] Y. Yusop *et al.*, "A Study of Capacitive Power Transfer Using Class-E Resonant Inverter," *Asian Journal of Scientific Research*, vol. 9, pp. 258-265, 2016.

[142] B. H. Choi, D. T. Nguyen, S. J. Yoo, J. H. Kim, and C. T. Rim, "A Novel Source-Side Monitored Capacitive Power Transfer System for Contactless Mobile Charger Using Class-E Converter," in *2014 IEEE 79th Vehicular Technology Conference (VTC Spring)*, 18-21 May 2014, pp. 1-5.

[143] X. Wang and B. Li, "DESIGN OF A WIRELESS CAPACITIVE POWER TRANSFER SYSTEM," *International Journal on Smart Sensing and Intelligent Systems*, vol. 10, no. 1, pp. 69-87, 2017.

[144] Z. Mustapa, S. Saat, and Y. Yusof, "A new design of capacitive power transfer based on hybrid approach for biomedical implantable device," *International Journal of Electrical and Computer Engineering*, vol. 9, no. 4, p. 2365, 2019.

[145] L. Huang, A. P. Hu, and A. Swain, "A resonant compensation method for improving the performance of capacitively coupled power transfer system," in *2014 IEEE Energy Conversion Congress and Exposition (ECCE)*, 14-18 Sept. 2014, pp. 870-875.

[146] U. Choi and J. Yang, "A 6.78-MHz 100-W Class E Power Amplifier Module with an Adaptive Power Combiner," in *2018 IEEE International Symposium on Radio-Frequency Integration Technology (RFIT)*, 15-17 Aug. 2018, pp. 1-3.

[147] U.-G. Choi and J.-R. Yang, "A 120 W Class-E Power Module with an Adaptive Power Combiner for a 6.78 MHz Wireless Power Transfer System," *Energies*, vol. 11, no. 8, p. 2083, 2018.

[148] K. K. Hasan, S. Saat, Y. Yusop, H. Husin, M. Z. Hussin, and Z. M. Yusoff, "Analysis and Design Capacitive Power Transfer (CPT) System for Low Application Using Class-E LCCL Inverter by Investigate Distance between Plates Capacitive," *Journal of Physics: Conference Series*, vol. 1529, p. 032094, 2020.

[149] Y. Sun, J. Yu, and X. Liu, "Design of class-E power amplifier for capacitive power transfer system," *Microelectronics Journal*, vol. 80, pp. 69-74, 2018.

[150] C. Yeh *et al.*, "A 70W and 90% GaN-based class-E wireless-power-transfer system with automatic-matching-point-search control for zero-voltage switching and zero-voltage-derivative switching," in *2018 IEEE International Solid - State Circuits Conference - (ISSCC)*, 11-15 Feb. 2018, pp. 138-140.

[151] A. Muharam *et al.*, "Preliminary study of 50 W Class-E GaN FET amplifier for 6.78 MHz capacitive wireless power transfer," *Journal of Mechatronics, Electrical Power, and Vehicular Technology*, vol. 11, no. 1, pp. 22-29, 2020.

[152] A. Clements, V. Vishnoi, S. Dehghani, and T. Johnson, "A Comparison of GaN Class E Inverter and Synchronous Rectifier Designs for 13.56 MHz, 27.12 MHz and 40.68 MHz ISM Bands," in *2018 IEEE Wireless Power Transfer Conference (WPTC)*, 3-7 June 2018, pp. 1-4.

[153] S. Ahmad, A. Muharam, and R. Hattori, "Rotary Capacitive Power Transfer with Class-E Inverter And Balun Circuit," in *2020 IEEE PELS Workshop on Emerging Technologies: Wireless Power Transfer (WoW)*, 15-19 Nov. 2020, pp. 330-333.

[154] H. Tebianian, Y. Salami, B. Jeyasurya, and J. E. Quaicoe, "A 13.56-MHz Full-Bridge Class-D ZVS Inverter With Dynamic Dead-Time Control for Wireless Power Transfer Systems," *IEEE Transactions on Industrial Electronics*, vol. 67, no. 2, pp. 1487-1497, 2020.

[155] L. R. Nerone, "A mathematical model of the Class D converter for compact fluorescent ballasts," *IEEE Transactions on Power Electronics*, vol. 10, no. 6, pp. 708-715, 1995.

[156] L. R. Nerone, "Analytical solutions of the Class D inverter," in *2008 IEEE International Symposium on Circuits and Systems*, 18-21 May 2008, pp. 1268-1271.

[157] H. Tebianian, J. Quaicoe, and B. Jeyasurya, "High frequency full-bridge Class-D inverter using eGaN® FET with dynamic dead-time control," in *2016 IEEE PELS Workshop on Emerging Technologies: Wireless Power Transfer (WoW)*, 4-6 Oct. 2016, pp. 95-99.

[158] X. Ge, L. Cheng, and W. Ki, "A DCM ZVS Class-D Power Amplifier for Wireless Power Transfer Applications," in *2019 IEEE Asian Solid-State Circuits Conference (A-SSCC)*, 4-6 Nov. 2019, pp. 43-44.

[159] L. R. Nerone, "Design of a 2.5-MHz, soft-switching, class-D converter for electrodeless lighting," *IEEE Transactions on Power Electronics*, vol. 12, no. 3, pp. 507-516, 1997.

[160] M. A. d. Rooij, "The ZVS voltage-mode class-D amplifier, an eGaN® FET-enabled topology for highly resonant wireless energy transfer," in *2015 IEEE Applied Power Electronics Conference and Exposition (APEC)*, 15-19 March 2015, pp. 1608-1613.

[161] K. H. Yi, "Electric field wireless power transfer with impedance transformation," in *2016 IEEE International Conference on Consumer Electronics (ICCE)*, 7-11 Jan. 2016, pp. 365-366.

[162] M. Kim and J. Choi, "Design of High frequency Resonant Inverter for Capacitive Wireless Power Transfer," in *2020 IEEE 21st Workshop on Control and Modeling for Power Electronics (COMPEL)*, 9-12 Nov. 2020, pp. 1-7.

[163] L. Huang, A. P. Hu, A. Swain, and X. Dai, "Comparison of two high frequency converters for capacitive power transfer," in *2014 IEEE Energy Conversion Congress and Exposition (ECCE)*, 14-18 Sept. 2014, pp. 5437-5443.

[164] S. Zang, K. Hou, and S. K. Nguang, "Underground Communications Using Capacitive Data Transfer Devices," *Journal of Sensors*, vol. 2020.

[165] I.-O. Lee, J. Kim, and W. Lee, "A High-Efficient Low-Cost Converter for Capacitive Wireless Power Transfer Systems," *Energies*, vol. 10, no. 9, p. 1437, 2017.

[166] B. Regensburger and K. K. Afridi, "Challenges and Solutions to Passive Rectification in Multi-MHz Frequency Capacitive Wireless Power Transfer Systems for Electric Vehicle Charging," in *2020 IEEE Energy Conversion Congress and Exposition (ECCE)*, 11-15 Oct. 2020, pp. 5482-5486.

[167] A. Reatti, M. K. Kazimierczuk, and R. Redl, "Class E full-wave low dv/dt rectifier," *IEEE Transactions on Circuits and Systems I: Fundamental Theory and Applications*, vol. 40, no. 2, pp. 73-85, 1993.

[168] F. C. Domingos, S. V. d. C. d. Freitas, and P. Mousavi, "Capacitive Power Transfer based on Compensation Circuit for Class E Resonant Full-Wave Rectifier," in *2018 IEEE Wireless Power Transfer Conference (WPTC)*, 3-7 June 2018, pp. 1-4.

[169] S. Sinha, A. Kumar, and K. K. Afridi, "Active variable reactance rectifier — A new approach to compensating for coupling variations in wireless power transfer systems," in *2017 IEEE 18th Workshop on Control and Modeling for Power Electronics (COMPEL)*, 9-12 July 2017, pp. 1-8.

[170] S. Sinha and K. K. Afridi, "Closed-loop Control of a Dynamic Capacitive Wireless Power Transfer System," in *2019 20th Workshop on Control and Modeling for Power Electronics (COMPEL)*, 17-20 June 2019, pp. 1-6.

[171] C. Liu, A. P. Hu, B. Wang, and N. C. Nair, "A Capacitively Coupled Contactless Matrix Charging Platform With Soft Switched Transformer Control," *IEEE Transactions on Industrial Electronics*, vol. 60, no. 1, pp. 249-260, 2013.

This work is licensed under a Creative Commons Attribution 4.0 License. For more information, see https://creativecommons.org/licenses/by/4.0/

This article has been accepted for publication in a future issue of this journal, but has not been fully edited. Content may change prior to final publication. Citation information: DOI 10.1109/ACCESS.2021.3139761, IEEE Access

[172] K. Lu, S. K. Nguang, S. Ji, and L. Wei, "Design of auto frequency tuning capacitive power transfer system based on class-E2 dc/dc converter," *IET Power Electronics*, vol. 10, no. 12, pp. 1588-1595, 2017.

[173] K. Lu and S. K. Nguang, "LQG control of capacitive power transfer system," in *2017 IEEE PELS Workshop on Emerging Technologies: Wireless Power Transfer (WoW)*, 20-22 May 2017, pp. 128-132.

[174] H. Choi, J. Park, and S. Choi, "Analysis and control of capacitive-coupled wireless power transmission system," in *2015 15th International Conference on Control, Automation and Systems (ICCAS)*, 13-16 Oct. 2015, pp. 1005-1009.

[175] B. Minnaert, F. Mastri, N. Stevens, A. Costanzo, and M. Mongiardo, "Coupling-Independent Capacitive Wireless Power Transfer Using Frequency Bifurcation," *Energies*, vol. 11, no. 7, p. 1912, 2018.

[176] R. Yang, X. Hu, and X. Dai, "Quasi sliding mode control law to improve robustness of the Π-S resonant type ECPT system," in *2017 IEEE PELS Workshop on Emerging Technologies: Wireless Power Transfer (WoW)*, 20-22 May 2017, pp. 1-3.

[177] Y. Su, Z. Wang, Y. Zhao, X. Wu, Z. Liu, and X. Qing, "Hybrid control of capacitive power transfer system for coupling capacitance variation," *Electrical Engineering*, vol. 102, no. 4, pp. 2245-2253, 2020.

[178] E. Abramov and M. M. Peretz, "Multi-Loop Control for Power Transfer Regulation in Capacitive Wireless Systems by Means of Variable Matching Networks," *IEEE Journal of Emerging and Selected Topics in Power Electronics*, vol. 8, no. 3, pp. 2095-2110, 2020.

[179] A. M. Sodagar and P. Amiri, "Capacitive coupling for power and data telemetry to implantable biomedical microsystems," in *2009 4th International IEEE/EMBS Conference on Neural Engineering*, 29 April-2 May 2009, pp. 411-414.

[180] S. Zang, K. Lu, S. K. Nguang, and W. Sun, "Robust H_∞ Output Feedback Control of a Rotary Capacitive Power Transfer System," *IEEE Access*, vol. 7, pp. 113452-113462, 2019.

[181] N. Kuyvenhoven, C. Dean, J. Melton, J. Schwannecke, and A. E. Umenei, "Development of a foreign object detection and analysis method for wireless power systems," in *2011 IEEE Symposium on Product Compliance Engineering Proceedings*, 10-12 Oct. 2011, pp. 1-6.

[182] Y.-G. Su, J.-H. Ma, S.-Y. Xie, Y.-M. Zhao, and X. Dai, "Analysis on safety issues of capacitive power transfer system," *International Journal of Applied Electromagnetics and Mechanics*, vol. 53, pp. 673-684, 2017.

[183] Q. Zhu, L. J. Zou, S. Zang, M. Su, and A. Hu, "Effect of Surrounding Conductive Object on Four-Plate Capacitive Power Transfer System," *arXiv: Applied Physics*, 2019.

[184] L. Pamungkas, M. Tampubolon, Y. Chang, and H. Chiu, "Resonant Network Transformation and Implementation of a Compacted Four-Plate Capacitive Power Transfer," in *2019 IEEE 4th International Future Energy Electronics Conference (IFEEC)*, 25-28 Nov. 2019, pp. 1-6.

[185] J. Xia *et al.*, "Foreign Object Detection for Electric Vehicle Wireless Charging," *Electronics*, vol. 9, no. 5, p. 805, 2020.

[186] C. Jeong, P. La, S. Choi, and H. Choi, "A novel target detection algorithm for capacitive power transfer systems," in *2018 IEEE Applied Power Electronics Conference and Exposition (APEC)*, 4-8 March 2018, pp. 3174-3177.

[187] B. Regensburger, A. Kumar, S. Sinha, and K. K. Afridi, "Impact of Foreign Objects on the Performance of Capacitive Wireless Charging Systems for Electric Vehicles," in *2018 IEEE Transportation Electrification Conference and Expo (ITEC)*, 13-15 June 2018, pp. 892-897.

[188] A. I. Al-Kalbani, M. R. Yuce, and J. Redouté, "A Biosafety Comparison Between Capacitive and Inductive Coupling in Biomedical Implants," *IEEE Antennas and Wireless Propagation Letters*, vol. 13, pp. 1168-1171, 2014.

[189] D. Ahn and M. Ghovanloo, "Optimal Design of Wireless Power Transmission Links for Millimeter-Sized Biomedical Implants," *IEEE Transactions on Biomedical Circuits and Systems*, vol. 10, no. 1, pp. 125-137, 2016.

[190] R. Erfani, F. Marefat, A. M. Sodagar, and P. Mohseni, "Modeling and Experimental Validation of a Capacitive Link for Wireless Power Transfer to Biomedical Implants," *IEEE Transactions on Circuits and Systems II: Express Briefs*, vol. 65, no. 7, pp. 923-927, 2018.

[191] A. Bartlett and P. Arsenault, "Wireless Power for Vehicle Lightweighting, Reducing Costs, and Improving Manufacturing Efficiencies: An Analysis of Resonant Capacitive Coupling and its Ability to Reduce Vehicle Weight and the Cost of Vehicle Manufacturing and Maintenance," in *2015 IEEE 82nd Vehicular Technology Conference (VTC2015-Fall)*, 6-9 Sept. 2015, pp. 1-5.

[192] T. M. Mostafa, D. Bui, A. Muharam, R. Hattori, and A. P. Hu, "A Capacitive Power Transfer System with a CL Network for Improved System Performance," in *2018 IEEE Wireless Power Transfer Conference (WPTC)*, 3-7 June 2018, pp. 1-4.

[193] T. M. Mostafa, A. Muharam, A. Patrick Hu, and R. Hattori, "Improved CPT system with less voltage stress and sensitivity using a step-down transformer on receiving side," *IET Power Electronics*, vol. 12, no. 10, pp. 2634-2641, 2019.

[194] T. M. Mostafa, D. Bui, A. Muharam, R. Hattori, and A. P. Hu, "Capacitive Power Transfer System with Reduced Voltage Stress and Sensitivity," *Applied Sciences*, vol. 8, no. 7, p. 1131, 2018.

[195] B. Luo, R. Mai, Y. Chen, Y. Zhang, and Z. He, "A voltage stress optimization method of capacitive power transfer charging system," in *2017 IEEE Applied Power Electronics Conference and Exposition (APEC)*, 26-30 March 2017, pp. 1456-1461.

[196] R. Mai, B. Luo, Y. Chen, and Z. He, "Double-sided CL compensation topology based component voltage stress optimisation method for capacitive power transfer charging system," *IET Power Electronics*, vol. 11, no. 7, pp. 1153-1160, 2018.

[197] B. Luo, A. P. Hu, H. Munir, Q. Zhu, R. Mai, and Z. He, "Compensation Network Design of CPT Systems for Achieving Maximum Power Transfer under Coupling Voltage Constraints," *IEEE Journal of Emerging and Selected Topics in Power Electronics*, pp. 1-1, 2020.

[198] J. Lian and X. Qu, "Design of a Double-Sided LC Compensated Capacitive Power Transfer System With Capacitor Voltage Stress Optimization," *IEEE Transactions on Circuits and Systems II: Express Briefs*, vol. 67, no. 4, pp. 715-719, 2020.

[199] J. Lian, X. Qu, X. Chen, and C. C. Mi, "Design of a Double-Sided LCLC Compensated Capacitive Power Transfer System with Predesigned Coupler Plate Voltage Stresses," *IEEE Journal of Emerging and Selected Topics in Power Electronics*, pp. 1-1, 2020.

[200] H.-S. Choi and S.-J. Choi, "Compact Drive Circuit for Capacitive Wireless Power Transfer System Utilizing Leakage-Enhanced Transformer," *Journal of Electrical Engineering & Technology*, vol. 14, no. 1, pp. 191-199, 2019.

[201] P. S. Almeida, J. M. Jorge, D. Botelho, D. P. Pinto, and H. A. C. Braga, "Proposal of a low-cost LED driver for a multistring street lighting luminaire," in *IECON 2012 - 38th Annual Conference on IEEE Industrial Electronics Society*, 25-28 Oct. 2012, pp. 4586-4590.

[202] D. Shmilovitz, S. Ozeri, and M. M. Ehsani, "A resonant LED driver with capacitive power transfer," in *2014 IEEE Applied Power Electronics Conference and Exposition - APEC 2014*, 16-20 March 2014 , pp. 1384-1387.

[203] D. Shmilovitz, A. Abramovitz, and I. Reichman, "Quasi-Resonant LED Driver With Capacitive Isolation and High PF," *IEEE Journal of Emerging and Selected Topics in Power Electronics*, vol. 3, no. 3, pp. 633-641, 2015.

[204] A. Abramovitz, I. Reichman, M. Ehsani, and D. Shmilovitz, "Off-line capacitively-isolated quasi resonant LED driver," in *2015 17th European Conference on Power Electronics and Applications (EPE'15 ECCE-Europe)*, 8-10 Sept. 2015, pp. 1-8.

This work is licensed under a Creative Commons Attribution 4.0 License. For more information, see https://creativecommons.org/licenses/by/4.0/

[205] A. Bazarov, A. Abramovitz, and D. Shmilovitz, "Multi-string capacitively isolated quasi- resonant LED driver," in *2017 International Conference on Optimization of Electrical and Electronic Equipment (OPTIM) & 2017 Intl Aegean Conference on Electrical Machines and Power Electronics (ACEMP)*, 25-27 May 2017, pp. 711-716.

[206] D. Chaney, C. A. Robinson, and C. W. V. Neste, "Quarter Wavelength Surface Structures for Improved Operation in Unipolar Capacitive Power Transfer," in *2019 IEEE PELS Workshop on Emerging Technologies: Wireless Power Transfer (WoW)*, 18-21 June 2019, pp. 234-237.

[207] C. Liu, A. P. Hu, and N. C. Nair, "Coupling study of a rotary Capacitive Power Transfer system," in *2009 IEEE International Conference on Industrial Technology*, 10-13 Feb. 2009, pp. 1-6.

[208] Q. Zhu, L. J. Zou, M. Su, and A. P. Hu, "E-Field Analysis of a 3D Capacitive Power Transfer Configuration with Single Source Excitation," in *2019 IEEE PELS Workshop on Emerging Technologies: Wireless Power Transfer (WoW)*, 18-21 June 2019, pp. 253-256.

[209] H. W. R. Liang, C. K. Lee, and S. Y. R. Hui, "Design, Analysis, and Experimental Verification of a Ball-Joint Structure With Constant Coupling for Capacitive Wireless Power Transfer," *IEEE Journal of Emerging and Selected Topics in Power Electronics*, vol. 8, no. 4, pp. 3582-3591, 2020.

[210] J. Dai and D. C. Ludois, "Biologically inspired coupling pixilation for position independence in capacitive power transfer surfaces," in *2015 IEEE Applied Power Electronics Conference and Exposition (APEC)*, 15-19 March 2015, pp. 3276-3282.

[211] G. G. da Silva and C. A. Petry, "Capacitive Wireless Power Transfer System Applied to Low power Mobile Device Charging," *Int. J. Electr. Energy*, vol. 3, no. 4, pp. 230-234, 2015.

[212] J. Zhu, Y. Ban, R. Xu, and C. C. Mi, "An NFC-CPT-Combined Coupler with Series-None Compensation for Metal-Cover Smartphone Applications," *IEEE Journal of Emerging and Selected Topics in Power Electronics*, pp. 1-1, 2020.

[213] M. B. Lillholm, Y. Dou, X. Chen, and Z. Zhang, "Analysis and Design of 10 MHz Capacitive Power Transfer with Multiple Independent Outputs for Low power Portable Devices," *IEEE Journal of Emerging and Selected Topics in Power Electronics*, pp. 1-1, 2020.

[214] J. Lopez-Lopez, C. Salto, P. Zumel, C. Fernández, A. Rodríguez-Lorente, and E. Olías, "High efficiency Capacitive Power Transfer Converter," in *2018 IEEE Applied Power Electronics Conference and Exposition (APEC)*, 4-8 March 2018, pp. 3149-3153.

[215] K. Kroics and J. Voitkans, "High frequency two-plate capacitive wireless power transfer system," in *proceedings of the international scientific conference*, 2018: [Latvijas Lauksaimniecības universitāte].

[216] G. Blakiewicz, M. Kłosowski, W. Jendernalik, J. Jakusz, and S. Szczepański, "Low power Receivers for Wireless Capacitive Coupling Transmission in 3-D-Integrated Massively Parallel CMOS Imager," *IEEE Transactions on Circuits and Systems I: Regular Papers*, vol. 67, no. 8, pp. 2556-2565, 2020.

[217] L. Chen, J. Sankman, R. Mukhopadhyay, M. Morgan, and D. B. Ma, "25.1 A 50.7% peak efficiency subharmonic resonant isolated capacitive power transfer system with 62mW output power for low power industrial sensor interfaces," in *2017 IEEE International Solid-State Circuits Conference (ISSCC)*, 5-9 Feb. 2017, pp. 428-429.

[218] E. Culurciello and A. G. Andreou, "Capacitive Inter-Chip Data and Power Transfer for 3-D VLSI," *IEEE Transactions on Circuits and Systems II: Express Briefs*, vol. 53, no. 12, pp. 1348-1352, 2006.

[219] E. Culurciello, P. O. Pouliquen, A. G. Andreou, K. Strohbehn, and S. Jaskulek, "Monolithic digital galvanic isolation buffer fabricated in silicon on sapphire CMOS," *Electronics Letters*, vol. 41, no. 9, pp. 526-528.

[220] C. Suarez, M. Kalmes, J. Suffeleers, and W. Martinez, "Frequency Splitting in an LCLC Capacitive Wireless Power Transfer System for Electric Vehicle Charging," in *IECON 2020 The 46th Annual Conference of the IEEE Industrial Electronics Society*, 18-21 Oct. 2020, pp. 3622-3627.

[221] B. Regensburger, A. Kumar, S. Sinha, and K. Afridi, "High-Performance 13.56-MHz Large Air-Gap Capacitive Wireless Power Transfer System for Electric Vehicle Charging," in *2018 IEEE 19th Workshop on Control and Modeling for Power Electronics (COMPEL)*, 25-28 June 2018, pp. 1-4.

[222] B. Regensburger, A. Kumar, S. Sinha, J. Xu, and K. K. Afridi, "High efficiency High power-Transfer-Density Capacitive Wireless Power Transfer System for Electric Vehicle Charging Utilizing Semi-Toroidal Interleaved-Foil Coupled Inductors," in *2019 IEEE Applied Power Electronics Conference and Exposition (APEC)*, 17-21 March 2019, pp. 1533-1538.

[223] S. Sinha, A. Kumar, B. Regensburger, and K. K. Afridi, "A New Design Approach to Mitigating the Effect of Parasitics in Capacitive Wireless Power Transfer Systems for Electric Vehicle Charging," *IEEE Transactions on Transportation Electrification*, vol. 5, no. 4, pp. 1040-1059, 2019.

[224] S. Sinha, B. Regensburger, K. Doubleday, A. Kumar, S. Pervaiz, and K. K. Afridi, "High power-transfer-density capacitive wireless power transfer system for electric vehicle charging," in *2017 IEEE Energy Conversion Congress and Exposition (ECCE)*, 1-5 Oct. 2017, pp. 967-974.

[225] A. Kumar, S. Pervaiz, C. Chieh-Kai, S. Korhummel, Z. Popovic, and K. K. Afridi, "Investigation of power transfer density enhancement in large air-gap capacitive wireless power transfer systems," in *2015 IEEE Wireless Power Transfer Conference (WPTC)*, 13-15 May 2015, pp. 1-4.

[226] B. Regensburger, S. Sinha, A. Kumar, J. Vance, Z. Popovic, and K. K. Afridi, "Kilowatt-scale large air-gap multi-modular capacitive wireless power transfer system for electric vehicle charging," in *2018 IEEE Applied Power Electronics Conference and Exposition (APEC)*, 4-8 March 2018, pp. 666-671.

[227] B. Regensburger *et al.*, "High-performance large air-gap capacitive wireless power transfer system for electric vehicle charging," in *2017 IEEE Transportation Electrification Conference and Expo (ITEC)*, 22-24 June 2017, pp. 638-643.

[228] B. Regensburger, S. Sinha, A. Kumar, and K. K. Afridi, "A 3.75-kW High power-Transfer-Density Capacitive Wireless Charging System for EVs Utilizing Toro idal-Interleaved-Foil Coupled Inductors," in *2020 IEEE Transportation Electrification Conference & Expo (ITEC)*, 23-26 June 2020, pp. 839-843.

[229] B. Regensburger, S. Sinha, A. Kumar, S. Maji, and K. K. Afridi, "High-Performance Multi-MHz Capacitive Wireless Power Transfer System for EV Charging Utilizing Interleaved-Foil Coupled Inductors," *IEEE Journal of Emerging and Selected Topics in Power Electronics*, pp. 1-1, 2020.

[230] J. Dai and D. C. Ludois, "Capacitive Power Transfer Through a Conformal Bumper for Electric Vehicle Charging," *IEEE Journal of Emerging and Selected Topics in Power Electronics*, vol. 4, no. 3, pp. 1015-1025, 2016.

[231] S. Maji, S. Sinha, B. Regensburger, F. Monticone, and K. K. Afridi, "Reduced-Fringing-Field Multi-MHz Capacitive Wireless Power Transfer System Utilizing a Metasurface-based Coupler," in *2020 IEEE 21st Workshop on Control and Modeling for Power Electronics (COMPEL)*, 9-12 Nov. 2020, pp. 1-6.

[232] B. Regensburger, J. Estrada, A. Kumar, S. Sinha, Z. Popović, and K. K. Afridi, "High-Performance Capacitive Wireless Power Transfer System for Electric Vehicle Charging with Enhanced Coupling Plate Design," in *2018 IEEE Energy Conversion Congress and Exposition (ECCE)*, 23-27 Sept. 2018, pp. 2472-2477.

[233] X. Chen, S. Yu, and Z. Zhang, "A Strip-Coupler for Dynamic Capacitive Wireless Power Transfer," in *IECON 2019 - 45th Annual Conference of the IEEE Industrial Electronics Society*, 14-17 Oct. 2019, vol. 1, pp. 4887-4892.

This work is licensed under a Creative Commons Attribution 4.0 License. For more information, see https://creativecommons.org/licenses/by/4.0/

This article has been accepted for publication in a future issue of this journal, but has not been fully edited. Content may change prior to final publication. Citation information: DOI 10.1109/ACCESS.2021.3139761, IEEE Access

[234] M. Behnamfar, H. Javadi, and E. Afjei, "A dynamic CPT system LC Compensated with a six-plate capacitive coupler for wireless charging of electric vehicle in motion," in *2020 28th Iranian Conference on Electrical Engineering (ICEE)*, 4-6 Aug. 2020, pp. 1-6.

[235] F. Lu, H. Zhang, H. Hofmann, Y. Mei, and C. Mi, "A dynamic capacitive power transfer system with reduced power pulsation," in *2016 IEEE PELS Workshop on Emerging Technologies: Wireless Power Transfer (WoW)*, 4-6 Oct. 2016, pp. 60-64.

[236] S. Y. Choi, B. W. Gu, S. Y. Jeong, and C. T. Rim, "Advances in Wireless Power Transfer Systems for Roadway-Powered Electric Vehicles," *IEEE Journal of Emerging and Selected Topics in Power Electronics*, vol. 3, no. 1, pp. 18-36, 2015.

[237] S. Hall, "Capacitive power transfer to car through wheel-is it possible?," *CODEN: LUTEDX/TEIE*, 2012.

[238] M. M. Arms, K. H. Truman-Jarrell, and C. W. V. Neste, "Investigating the Interactions Between Capacitive Wireless Power Transfer Technology and Concrete," in *2020 IEEE PELS Workshop on Emerging Technologies: Wireless Power Transfer (WoW)*, 15-19 Nov. 2020, pp. 218-222.

[239] H. Zhang, F. Lu, and C. Mi, "An electric roadway system leveraging dynamic capacitive wireless charging: furthering the continuous charging of electric vehicles," *IEEE Electrification Magazine*, vol. 8, no. 2, pp. 52-60, 2020.

[240] K. Song, K. E. Koh, C. Zhu, J. Jiang, C. Wang, and X. Huang, "A Review of Dynamic Wireless Power Transfer for In-Motion Electric Vehicles," in *Wireless Power Transfer - Fundamentals and Technologies*, 2016, ch. 6, pp. 109-128.

[241] M. Ang, Y. Jian, Z. Qi, N. Sijie, S. Yao, and D. Mi, "A power electronic transformer based on a 4-plate compact capacitive coupler," in *2017 IEEE 3rd International Future Energy Electronics Conference and ECCE Asia (IFEEC 2017 - ECCE Asia)*, 3-7 June 2017, pp. 304-307.

[242] J. Shin, M. Ishigaki, E. M. Dede, and J. S. Lee, "Bidirectional DC-DC converter utilizing magnetic and capacitive power transfer — 97.1% Efficiency at 1.2-MHz switching," in *2017 IEEE Energy Conversion Congress and Exposition (ECCE)*, 1-5 Oct. 2017, pp. 5704-5711.

[243] X. D. Qing, Z. H. Wang, Y. G. Su, Y. M. Zhao, and X. Y. Wu, "Parameter Design Method With Constant Output Voltage Characteristic for Bilateral LC-Compensated CPT System," *IEEE Journal of Emerging and Selected Topics in Power Electronics*, vol. 8, no. 3, pp. 2707-2715, 2020.

[244] P. J. Vishnu and N. R. Tummuru, "A Phase Shift Control Strategy For Bidirectional Power Flow In Capacitive Wireless Power Transfer System Using LCLC Compensation," in *2020 IEEE International Conference on Power Electronics, Smart Grid and Renewable Energy (PESGRE2020)*, 2-4 Jan. 2020, pp. 1-6.

[245] L. Yang, M. Ju, and B. Zhang, "Bidirectional Undersea Capacitive Wireless Power Transfer System," *IEEE Access*, vol. 7, pp. 121046-121054, 2019.

[246] W. C. Cheah, S. A. Watson, and B. Lennox, "Limitations of wireless power transfer technologies for mobile robots," *Wireless Power Transfer*, vol. 6, no. 2, pp. 175-189, 2019.

[247] A. Muharam, S. Ahmad, R. Hattori, and A. Hapid, "13.56 MHz Scalable Shielded-Capacitive Power Transfer for Electric Vehicle Wireless Charging," in *2020 IEEE PELS Workshop on Emerging Technologies: Wireless Power Transfer (WoW)*, 15-19 Nov. 2020, pp. 298-303.

[248] A. Sarin, D. Abbot, S. Revzen, and A. Avestruz, "Bidirectional Capacitive Wireless Power Transfer for Energy Balancing in Modular Robots," in *2020 IEEE Applied Power Electronics Conference and Exposition (APEC)*, 15-19 March 2020, pp. 852-859.

[249] A. Sarin and A. T. Avestruz, "Code Division Multiple Access Wireless Power Transfer for Energy Sharing in Heterogenous Robot Swarms," *IEEE Access*, vol. 8, pp. 132121-132133, 2020.

[250] M. Lu, M. Bagheri, A. P. James, and T. Phung, "Wireless Charging Techniques for UAVs: A Review, Reconceptualization, and Extension," *IEEE Access*, vol. 6, pp. 29865-29884, 2018.

[251] M. Simic, C. Bil, and V. Vojisavljevic, "Investigation in Wireless Power Transmission for UAV Charging," *Procedia Computer Science*, vol. 60, pp. 1846-1855, 2015.

[252] A. M. Le, L. H. Truong, T. V. Quyen, C. V. Nguyen, and M. T. Nguyen, "Wireless power transfer near-field technologies for unmanned aerial vehicles (uavs): A review," *EAI Endorsed Transactions on Industrial Networks and Intelligent Systems*, vol. 7, no. 22, p. 162831, 2020.

[253] A. Muharam, T. M. Mostafa, and R. Hattori, "Design of power receiving side in wireless charging system for UAV application," in *2017 International Conference on Sustainable Energy Engineering and Application (ICSEEA)*, 23-24 Oct. 2017, pp. 133-139.

[254] T. M. Mostafa, A. Muharam, and R. Hattori, "Wireless battery charging system for drones via capacitive power transfer," in *2017 IEEE PELS Workshop on Emerging Technologies: Wireless Power Transfer (WoW)*, 20-22 May 2017, pp. 1-6.

[255] D.-H. Kim and D. Ahn, "Optimization of Capacitive Wireless Power Transfer System for Maximum Efficiency," *Journal of Electrical Engineering & Technology*, vol. 15, no. 1, pp. 343-352, 2020.

[256] C. Park, J. Park, Y. Shin, S. Huh, J. Kim, and S. Ahn, "Separated Circular Capacitive Couplers for Rotational Misalignment of Drones," in *2019 IEEE Wireless Power Transfer Conference (WPTC)*, 18-21 June 2019, pp. 635-638.

[257] D. Vincent, P. S. Huynh, L. Patnaik, and S. S. Williamson, "Prospects of Capacitive Wireless Power Transfer (C-WPT) for Unmanned Aerial Vehicles," in *2018 IEEE PELS Workshop on Emerging Technologies: Wireless Power Transfer (Wow)*, 3-7 June 2018, pp. 1-5.

[258] H. Zhang and F. Lu, "Feasibility Study of the High power Underwater Capacitive Wireless Power Transfer for the Electric Ship Charging Application," in *2019 IEEE Electric Ship Technologies Symposium (ESTS)*, 14-16 Aug. 2019, pp. 231-235.

[259] T. Orekan and P. Zhang, *Underwater Wireless Power Transfer: Smart Ocean Energy Converters*. Cham, Switzerland: Springer, 2019, ISBN 978-3-030-02561-8.

[260] M. Tamura, Y. Naka, K. Murai, and T. Nakata, "Design of a Capacitive Wireless Power Transfer System for Operation in Fresh Water," *IEEE Transactions on Microwave Theory and Techniques*, vol. 66, no. 12, pp. 5873-5884, 2018.

[261] M. Tamura, Y. Naka, and K. Murai, "Design of Capacitive Coupler for Wireless Power Transfer Under Fresh Water Focusing on kQ Product," in *2018 IEEE/MTT-S International Microwave Symposium - IMS*, 10-15 June 2018, pp. 1257-1260.

[262] M. Tamura, K. Murai, and M. Matsumoto, "Design of Conductive Coupler for Underwater Wireless Power and Data Transfer," *IEEE Transactions on Microwave Theory and Techniques*, vol. 69, no. 1, pp. 1161-1175, 2021.

[263] H. Zhang and F. Lu, "Insulated Coupler Structure Design for the Long-Distance Freshwater Capacitive Power Transfer," *IEEE Transactions on Industrial Informatics*, vol. 16, no. 8, pp. 5191-5201, 2020.

[264] H. Mahdi, B. Hoff, and T. Østrem, "Evaluation of Capacitive Power Transfer for Small Vessels Charging Applications," in *2020 IEEE 29th International Symposium on Industrial Electronics (ISIE)*, 17-19 June 2020, pp. 1605-1610.

[265] D. C. Ludois, J. K. Reed, and K. Hanson, "Capacitive Power Transfer for Rotor Field Current in Synchronous Machines," *IEEE Transactions on Power Electronics*, vol. 27, no. 11, pp. 4638-4645, 2012.

[266] D. C. Ludois, K. Hanson, and J. K. Reed, "Capacitive power transfer for slip ring replacement in wound field synchronous machines," in *2011 IEEE Energy Conversion Congress and Exposition*, 17-22 Sept. 2011, pp. 1664-1669.

[267] S. Hagen, M. Tisler, J. Dai, I. P. Brown, and D. C. Ludois, "Use of the Rotating Rectifier Board as a Capacitive Power Coupler for Brushless Wound Field Synchronous Machines,"

This work is licensed under a Creative Commons Attribution 4.0 License. For more information, see https://creativecommons.org/licenses/by/4.0/

This article has been accepted for publication in a future issue of this journal, but has not been fully edited. Content may change prior to final publication. Citation information: DOI 10.1109/ACCESS.2021.3139761, IEEE Access

IEEE Journal of Emerging and Selected Topics in Power Electronics, pp. 1-1, 2020.

[268] J. Dai, S. Hagen, D. C. Ludois, and I. P. Brown, "Synchronous generator field excitation via capacitive coupling through a journal bearing," in *2016 IEEE Energy Conversion Congress and Exposition (ECCE)*, 18-22 Sept. 2016, pp. 1-8.

[269] J. Dai, S. S. Hagen, and D. C. Ludois, "High efficiency Multiphase Capacitive Power Transfer in Sliding Carriages With Closed-Loop Burst-Mode Current Control," *IEEE Journal of Emerging and Selected Topics in Power Electronics*, vol. 7, no. 2, pp. 1388-1398, 2019.

[270] C. D. Rouse, S. R. Cove, Y. Salami, P. Arsenault, and A. Bartlett, "Three-phase Resonant Capacitive Power Transfer for Rotary Applications," *IEEE Journal of Emerging and Selected Topics in Power Electronics*, pp. 1-1, 2020.

[271] B. Luo, R. Mai, R. Shi, and Z. He, "Analysis and designed of three-phase capacitive coupled wireless power transfer for high power charging system," in *2018 IEEE Applied Power Electronics Conference and Exposition (APEC)*, 4-8 March 2018, pp. 1369-1374.

[272] D. C. Ludois, M. J. Erickson, and J. K. Reed, "Aerodynamic Fluid Bearings for Translational and Rotating Capacitors in Noncontact Capacitive Power Transfer Systems," *IEEE Transactions on Industry Applications*, vol. 50, no. 2, pp. 1025-1033, 2014.

[273] N. Nabila, S. Saat, Y. Yusop, M. Isa, and A. Basari, "The design of auto-tuning capacitive power transfer for rotary applications using phased-locked-loop," *International Journal of Power Electronics and Drive Systems*, vol. 10, no. 1, p. 307, 2019.

[274] Y. Yusop, S. Saat, Z. Ghani, H. Husin, M. Adie, and S. K. Nguang, "Cascaded Boost-Class-E for rotary capacitive power transfer system," *The Journal of Engineering*, vol. 2019, no. 17, pp. 3742-3748, 2019.

[275] R. Sedehi *et al.*, "A Wireless Power Method for Deeply Implanted Biomedical Devices via Capacitively Coupled Conductive Power Transfer," *IEEE Transactions on Power Electronics*, vol. 36, no. 2, pp. 1870-1882, 2021.

[276] R. Narayanamoorthi, "Modeling of Capacitive Resonant Wireless Power and Data Transfer to Deep Biomedical Implants," *IEEE Transactions on Components, Packaging and Manufacturing Technology*, vol. 9, no. 7, pp. 1253-1263, 2019.

[277] R. Erfani, F. Marefat, and P. Mohseni, "A Dual-Output Single-Stage Regulating Rectifier With PWM and Dual-Mode PFM Control for Wireless Powering of Biomedical Implants," *IEEE Transactions on Biomedical Circuits and Systems*, vol. 14, no. 6, pp. 1195-1206, 2020.

[278] R. Erfani, F. Marefat, S. Nag, and P. Mohseni, "A 1–10-MHz Frequency-Aware CMOS Active Rectifier With Dual-Loop Adaptive Delay Compensation and >230-mW Output Power for Capacitively Powered Biomedical Implants," *IEEE Journal of Solid-State Circuits*, vol. 55, no. 3, pp. 756-766, 2020.

[279] Y. Alazzawi, K. Aono, E. L. Scheller, and S. Chakrabartty, "Exploiting Self-Capacitances for Wireless Power Transfer," *IEEE Transactions on Biomedical Circuits and Systems*, vol. 13, no. 2, pp. 425-434, 2019.

[280] C. Zhang, R. Gallichan, D. M. Budgett, and D. McCormick, "A precision low power analog front end in 180 nm CMOS for wireless implantable capacitive pressure sensors," *Integration*, vol. 70, pp. 151-158, 2020.

[281] K. V. T. Piipponen, R. Sepponen, and P. Eskelinen, "A Biosignal Instrumentation System Using Capacitive Coupling for Power and Signal Isolation," *IEEE Transactions on Biomedical Engineering*, vol. 54, no. 10, pp. 1822-1828, 2007.

[282] D. Lee, Y. Lim, and K. Park, "Low power Unobtrusive ECG Sensor System for Wireless Power Transfer," in *2020 IEEE Wireless Power Transfer Conference (WPTC)*, 15-19 Nov. 2020, pp. 450-452.

[283] S. Nag, A. Koruprolu, S. M. Saikh, R. Erfani, and P. Mohseni, "Auto-Resonant Tuning for Capacitive Power and Data Telemetry Using Flexible Patches," *IEEE Transactions on Circuits and Systems II: Express Briefs*, vol. 67, no. 10, pp. 1804-1808, 2020.

[284] K. Bazaka and M. V. Jacob, "Implantable Devices: Issues and Challenges," *Electronics*, vol. 2, no. 1, 2013.

[285] G. L. Barbruni, P. M. Ros, D. Demarchi, S. Carrara, and D. Ghezzi, "Miniaturised Wireless Power Transfer Systems for Neurostimulation: A Review," *IEEE Transactions on Biomedical Circuits and Systems*, vol. 14, no. 6, pp. 1160-1178, 2020.

[286] W. Y. Po and S. Warisawa, "Coil Shape Antenna Design To Enhance The Performance Of 1 Pair Capacitive Coupling For Implant Medical Device Application," in *2020 IEEE Wireless Power Transfer Conference (WPTC)*, 15-19 Nov. 2020, pp. 49-52.

[287] N. R., V. J. A., B. Chokkalingam, S. Padmanaban, and Z. M. Leonowicz, "Class E Power Amplifier Design and Optimization for the Capacitive Coupled Wireless Power Transfer System in Biomedical Implants," *Energies*, vol. 10, no. 9, p. 1409, 2017.

[288] F. Lu, H. Zhang, H. Hofmann, and C. C. Mi, "An Inductive and Capacitive Combined Wireless Power Transfer System With LC-Compensated Topology," *IEEE Transactions on Power Electronics*, vol. 31, no. 12, pp. 8471-8482, 2016.

[289] Y. Wu, Q. Chen, X. Ren, and Z. Zhang, "A Parallel-Connected Hybrid Inductive and Capacitive Coupler With Double-Sided LCL Compensation Topology," in *2020 IEEE PELS Workshop on Emerging Technologies: Wireless Power Transfer (WoW)*, 15-19 Nov. 2020, pp. 79-83.

[290] W. Zhou, Y. Su, L. Huang, X. Qing, and A. P. Hu, "Wireless Power Transfer Across a Metal Barrier by Combined Capacitive and Inductive Coupling," *IEEE Transactions on Industrial Electronics*, vol. 66, no. 5, pp. 4031-4041, 2019.

[291] X. Li, C. Tang, X. Dai, P. Deng, and Y. Su, "An Inductive and Capacitive Combined Parallel Transmission of Power and Data for Wireless Power Transfer Systems," *IEEE Transactions on Power Electronics*, vol. 33, no. 6, pp. 4980-4991, 2018.

[292] B. Minnaert and N. Stevens, "Conjugate image theory for non-symmetric inductive, capacitive and mixed coupling," in *2017 IEEE Wireless Power Transfer Conference (WPTC)*, 10-12 May 2017, pp. 1-4.

[293] B. Minnaert and N. Stevens, "Maximizing the Power Transfer for a Mixed Inductive and Capacitive Wireless Power Transfer System," in *2018 IEEE Wireless Power Transfer Conference (WPTC)*, 3-7 June 2018, pp. 1-4.

[294] B. Luo, X. Zhou, T. Long, R. Mai, and Z. He, "Misalignment tolerance wireless power transfer system combining inductive and capacitive coupling," *IET Electric Power Applications*, vol. 14, no. 10, pp. 1925-1932, 2020.

[295] B. Luo, T. Long, L. Guo, R. Dai, R. Mai, and Z. He, "Analysis and Design of Inductive and Capacitive Hybrid Wireless Power Transfer System for Railway Application," *IEEE Transactions on Industry Applications*, vol. 56, no. 3, pp. 3034-3042, 2020.

[296] B. Luo, T. Long, R. Mai, R. Dai, Z. He, and W. Li, "Analysis and design of hybrid inductive and capacitive wireless power transfer for high power applications," *IET Power Electronics*, vol. 11, no. 14, pp. 2263-2270, 2018.

[297] D. Vincent, P. S. Huynh, N. A. Azeez, L. Patnaik, and S. S. Williamson, "Evolution of Hybrid Inductive and Capacitive AC Links for Wireless EV Charging—A Comparative Overview," *IEEE Transactions on Transportation Electrification*, vol. 5, no. 4, pp. 1060-1077, 2019.

[298] D. Vincent, P. S. Huynh, and S. S. Williamson, "A Novel Three Leg Inverter for High power Hybrid Inductive and Capacitive Wireless Power Transfer System," in *IECON 2019 - 45th Annual Conference of the IEEE Industrial Electronics Society*, 14-17 Oct. 2019, vol. 1, pp. 1544-1548.

[299] M. Ishigaki, J. Shin, and E. M. Dede, "A Novel Soft Switching Bidirectional DC–DC Converter Using Magnetic and Capacitive Hybrid Power Transfer," *IEEE Transactions on Power Electronics*, vol. 32, no. 9, pp. 6961-6970, 2017.

[300] M. Al-Saadi, M. Fadel, S. Al-Chlaihawi, L. Al-Bahrani, and A. Craciunescu, "Capacitive Power Transfer for Wireless Batteries

This work is licensed under a Creative Commons Attribution 4.0 License. For more information, see https://creativecommons.org/licenses/by/4.0/

This article has been accepted for publication in a future issue of this journal, but has not been fully edited. Content may change prior to final publication. Citation information: DOI 10.1109/ACCESS.2021.3139761, IEEE Access

Charging," *Electrotehnică, Electronică, Automatică,* vol. 66, pp. 40-51, 2018.

[301] B. Minnaert, A. Costanzo, G. Monti, and M. Mongiardo, "Capacitive Wireless Power Transfer with Multiple Transmitters: Efficiency Optimization," *Energies*, vol. 13, no. 13, p. 3482, 2020.

[302] B. Minnaert, M. Mongiardo, A. Costanzo, and F. Mastri, "Maximum efficiency solution for capacitive wireless power transfer with N receivers," *Wireless Power Transfer*, vol. 7, no. 1, pp. 65-75, 2020.

[303] B. Minnaert and N. Stevens, "Optimal Analytical Solution for a Capacitive Wireless Power Transfer System with One Transmitter and Two Receivers," *Energies*, vol. 10, no. 9, p. 1444, 2017.

[304] B. Minnaert, F. Mastri, A. Costanzo, M. Mongiardo, and N. Stevens, "Optimizing the Power Output for a Capacitive Wireless Power Transfer System with N receivers," in *2019 IEEE Wireless Power Transfer Conference (WPTC)*, 18-21 June 2019, pp. 351-354.

[305] V. Vu *et al.*, "A multi-output capacitive charger for electric vehicles," in *2017 IEEE 26th International Symposium on Industrial Electronics (ISIE)*, 19-21 June 2017, pp. 565-569.

[306] S. Zang and S. K. Nguang, "Capactive Power Transfer Design for Multiple Receivers on Conveyors," in *IECON 2019 - 45th Annual Conference of the IEEE Industrial Electronics Society*, 14-17 Oct. 2019, vol. 1, pp. 4183-4188.

[307] Y. Su, S. Xie, A. P. Hu, C. Tang, W. Zhou, and L. Huang, "Capacitive Power Transfer System With a Mixed-Resonant Topology for Constant-Current Multiple-Pickup Applications," *IEEE Transactions on Power Electronics*, vol. 32, no. 11, pp. 8778-8786, 2017.

[308] W. Zhou, L. Huang, B. Luo, R. Mai, Z. He, and A. P. Hu, "A General Mutual Coupling Model of MIMO Capacitive Coupling Interface With Arbitrary Number of Ports," *IEEE Transactions on Power Electronics*, vol. 36, no. 6, pp. 6163-6167, 2021.

[309] B. Minnaert, G. Monti, F. Mastri, A. Costanzo, and M. Mongiardo, "Power maximization for a multiple–input and multiple-output wireless power transfer system described by the admittance matrix," in *2020 XXXIIIrd General Assembly and Scientific Symposium of the International Union of Radio Science*, 29 Aug.-5 Sept. 2020, pp. 1-4.

[310] D. C. Ludois and K. Frankforter, "A Rotating Double Layer Capacitive Slip Ring Concept for Power & Heat Transfer in Machines using an Ionic Conducting Working Fluid," in *2020 IEEE Energy Conversion Congress and Exposition (ECCE)*, 11-15 Oct. 2020, pp. 4238-4245.

[311] IEEE, "IEEE Approved Draft Standard for Safety Levels with Respect to Human Exposure to Electric, Magnetic and Electromagnetic Fields, 0 Hz to 300 GHz," ed: IEEE Piscataway, NJ, USA, 2020.



MEHMET ZAHID EREL was born in Sakarya, Turkey. He received the B.S. degree in electrical engineering from the Yildiz Technical University, Istanbul, Turkey, in 2013, and the M.S. degree in electronics and communication engineering from the Ankara Yildirim Beyazit University, Ankara, Turkey, in 2016. He is currently pursuing the Ph.D. degree with the department of electrical and electronics engineering, Ankara Yildirim Beyazit University, Ankara, Turkey.

His research interests include applications of power electronics, renewable energy, and wireless power transfer.



KAMIL CAGATAY BAYINDIR was born in Turkey, in 1973. He received the B.Sc. and M.Sc. degrees in Electrical-Electronics Engineering from Middle East Technical University, Ankara, Turkey, in 1995 and 2000, respectively, and the Ph.D. degree in Electrical and Electronics Engineering from Cukurova University, Adana, Turkey in 2006.

He was a research assistant at Middle East Technical University from 1997 to 2000. He worked as a Chief Engineer in energy sector for 10 years and returned to university in 2009. Between 2009 and 2014 he worked at Cukurova University, Faculty of Engineering, Department of Electrical and Electronic Engineering, Adana, Turkey. Currently he is with Ankara Yıldırım Beyazıt University, Ankara, Turkey. His research interests include power electronics, electrical power quality, microgrids and renewable energy applications.

He is a member of Turkish TSO Advisory Board and President of the Association of Digitalization in Energy.



MEHMET TIMUR AYDEMIR (Member, IEEE) (S'92–M'95) was born in Turkey, in 1962. He received the B.Sc. and M.Sc. degrees in Electrical-Electronics Engineering from Karadeniz Technical University, Trabzon, Turkey, in 1983 and 1985, respectively, and the Ph.D. degree in Electrical and Computer Engineering from the University of Wisconsin, Madison, WI, USA, in 1995.

He was a research assistant at Karadeniz Technical University from 1984 to 1987. Between 1995 and 2020 he worked at Gazi University, Faculty of Engineering, Department of Electrical and Electronic Engineering, Ankara, Turkey. Currently he is with Kadir Has University, Istanbul, Turkey. His research interests include power electronics, electrical machines, and renewable energy applications.

Dr. Aydemir was the recipient of Fulbright Scholarship in 2001 and spent a year at the University of Wisconsin, Madison as a Visiting Researcher.



SANJAY K. CHAUDHARY (S' 01-M' 11) received the M. Tech. degree in electrical engineering from IIT Kanpur, Kanpur, India, in 2002, and the Ph.D. degree in electrical engineering from Aalborg University, Aalborg, Denmark, in 2011.

He was with ABB Ltd., Bangalore, India, from 2002 to 2005, and then he joined the Honeywell Technology Solutions Laboratory, Bangalore. Since 2011, he has been an Assistant Professor with the Department of Energy Technology, Aalborg University. His current research interests include grid integration of renewable energy, the application of power converters in power systems, high voltage dc transmission, and flexible ac transmission systems.

This work is licensed under a Creative Commons Attribution 4.0 License. For more information, see https://creativecommons.org/licenses/by/4.0/

This article has been accepted for publication in a future issue of this journal, but has not been fully edited. Content may change prior to final publication. Citation information: DOI 10.1109/ACCESS.2021.3139761, IEEE Access



JOSEP M. GUERRERO (Fellow, IEEE) received the B.S degree in telecommunications engineering, the M.S. degree in electronics engineering, and the Ph.D degree in power electronics from the Technical University of Catalonia, Barcelona, in 1977, 2000, and 2003, respectively. Since 2011, he has been a Full Professor with the Department of Energy Technology, Aalborg University, Denmark, where he is responsible for the Microgrid Research Program (www.microgrids. et.aau.dk). He was a Chair Professor with Shandong University in 2014; a Distinguished Guest Professor with Hunan University in 2015; and a Guest Professor with the Nanjing University of Posts and Telecommunications. In 2019, he became a Villum Investigator by the Villum Fonden, which supports the Centre for Research on Microgrids, Aalborg University, where being the Founder and the Director. His research interests is oriented to different microgrid aspects, including power electronics, distributed energy-storage systems, hierarchical and cooperative control, energy management systems, smart metering and the Internet of Things for AC/DC microgrid clusters, and islanded minigrids. Specially focused on maritime microgrids for electrical ships, vessels, ferries and seaports.

He has published more than 500 journal papers in the fields of microgrids and renewable energy systems, which are cited more than 40 000 times. He received the best paper award of the IEEE TRANSACTIONS ON ENERGY CONVERSION from 2014 to 2015, the best paper prize of IEEE PES in 2015, and the best paper award of the Journal of Power Electronics in 2016. During six consecutive years, from 2014 to 2019, he was awarded by Clarivate Analytics (former, Thomson Reuters) as Highly Cited Researcher. He is an Associate Editor for a number of IEEE Transactions. In 2015, he was elevated as IEEE Fellow for his contributions on "distributed power systems and microgrids."

This work is licensed under a Creative Commons Attribution 4.0 License. For more information, see https://creativecommons.org/licenses/by/4.0/