ANKARA YILDIRIM BEYAZIT UNIVERSITY

GRADUATE SCHOOL OF NATURAL AND APPLIED SCIENCES



DESIGN AND IMPROVEMENT OF AN INTELLIGENT CONTROL SYSTEM TO SOLVE THE DAM GROUND WATER PROBLEM

M.Sc. Thesis by

Omar Farhan AL-HARDANEE

Department of Electrical and Electronic Engineering

January, 2019

ANKARA

DESIGN AND IMPROVEMENT OF AN INTELLIGENT CONTROL SYSTEM TO SOLVE THE DAM GROUND WATER PROBLEM

A Thesis Submitted to

The Graduate School of Natural and Applied Sciences of

Ankara Yıldırım Beyazıt University

In Partial Fulfillment of the Requirements for the Degree of Master of Science in Electrical and Electronic Engineering, Department of Electrical and Electronic Engineering

By

Omar Farhan AL-HARDANEE

January, 2019

ANKARA

M.Sc. THESIS EXAMINATION RESULT FORM

We have read the thesis entitled **"DESIGN AND IMPROVEMENT OF AN INTELLIGENT CONTROL SYSTEM TO SOLVE THE DAM GROUND WATER PROBLEM"** completed by **Omar Farhan AL-HARDANEE** under the supervision of **PROF. DR. Hüseyin CANBOLAT** and we certify that in our opinion it is fully adequate, in scope and in quality, as a thesis for the degree of Master of Science.

Prof. Dr. Hüseyin CANBOLAT

Supervisor

Prof. Dr. Şerafettin EREL

Jury Member

Assoc.Prof. Dr. Mehmet DEMIRTAŞ

Jury Member

Prof. Dr. Ergün ERASLAN

Director

Graduate School of Natural and Applied Sciences

ETHICAL DECLARATION

I hereby declare that, in this thesis which has been prepared in accordance with the Thesis Writing Manual of Graduate School of Natural and Applied Sciences,

- All data, information and documents are obtained in the framework of academic and ethical rules,
- All information, documents and assessments are presented in accordance with scientific ethics and morals,
- All the materials that have been utilized are fully cited and referenced,
- No change has been made on the utilized materials,
- All the works presented are original,

and in any contrary case of above statements, I accept to renounce all my legal rights.

Date: 15.01.2019 **Signature: ……**

Name & Surname: Omar Farhan AL-HARDANEE

ACKNOWLEDGMENTS

In the name of ALLAH, the most Gracious, the Most Merciful for giving me the strength to complete this work in its final form. My Lord mercy and peace be upon our leader MOHAMMED peace be upon on him, who invites us to science and wisdom, and members of his family and his followers. I would like to express gratitude to my supervisor, Prof. Dr. Hüseyin CANBOLAT for his patience, encouragement, useful advice, discussion, comments and understanding my situation. He gave me opportunities to present my work in front of experts in the field. I would like to thank all my colleagues and the M.Sc. Studies staff members of the Department of Electrical and Electronics Engineering, ANKARA YILDIRIM BEYAZIT UNIVERSITY.

I would like to express my sincere thanks and gratitude to Mr. Abdulmuttalib Abdulkareem MUHSEN, M.Sc.(Eng.) Chief Engineer at Iraqi Ministry of Electricity, Haditha hydropower station for providing me with the necessary information to complete my work for my thesis, and Mr. Ali AL-HARDANEE, M.Sc.(Eng.).

I would like to express my thanks and profound gratitudes to my father and mother for their supporting me throughout my academic career. Without their moral support, interest, and encouragement for my academic work, the completion of this effort would not have been possible.

I would like to express my profound gratitude to my uncles, brothers, sisters and family.

I would like to thank my best friends Ahmed KASAPBAŞI, Mohammed ALBABA, Abdalrhman, M., A., S. and Dr. Emin OKUMUS for mutual advice throughout.

I would like to thank (GLC) company for loan us some devices.

Last, but not least, I would like to thank all my teachers who taught me the length of my career and all the people who have supported this research directly or indirection.

2019, 15 January **Omar Farhan AL-HARDANEE**

DESIGN AND IMPROVEMENT OF AN INTELLIGENT CONTROL SYSTEM TO SOLVE THE DAM GROUND WATER PROBLEM

ABSTRACT

The dams are one of the important sources of electric power in the world and electric control devices are very important in these dams, but flow the groundwater to the control rooms in the dam may cause corruption of electrical and electronic devices, therefor the dam operators are working to draw water by using pumps. These pumps need a continuous electrical source. Where the groundwater flowing into the main building of the dam continuously, with no possibility of treated it with building materials, this is aggravated risk, which threatens to become catastrophic if it continues, and with the negative indications of the use of diesel generators to supply the pumps responsible for disposal of this water, where the high cost of continuous fuel and consumption in the generators, and the most important is that the region is going through conflicts, where it becomes impossible to bring fuel to run the generator. In addition to that, increasing emissions of gases from the diesel generator that negatively affect the environment, and with the development of technology, it became necessary to find a perfect solution and get rid of all these negatives.

We have conducted a study to find the optimal and most efficient solution to these problems, where we used the clean sources of energy that available all the time with the design of a sophisticated and highly efficient system to regulate and balance the work of the system.

The control system regulates the work of renewable energy sources using the battery system and the main turbines of the dam to supply the dam system with the required energy, and adding the energy of clean sources to the power generated from the dam to supply electricity to the cities in case of dam work, The controller will find the best solutions for the system's operation efficiently, without using diesel generator, which is used in emergency situations

Keywords: Intelligent Control System, dam groundwater, clean energy, hydro energy, solar energy, wind energy, Homer program.

BARAJLARDA YERALTI SULARI PROBLEMİNİ ÇÖZMEK İÇİN ZEKİ BİR KONTROL SİSTEMİNİN TASARIMI VE GELİŞTİRİLMESİ

ÖZ

Barajlar dünyadaki önemli elektrik gücü kaynaklarından biridir ve elektrik kontrol araçları barajlar bakımından çok önemlidir. Ancak yüzey sularının barajlardaki kontrol odalarına akması elektrik ve elektronik cihazların bozulmasına yol açabildiğinden baraj operatörleri pompalarla sürekli suyu çekmeye çalışırlar. Pompalarsa sürekli bir elektrik kaynağına ihtiyaç duymaktadırlar. Yüzey suyunun sürekli olarak barajın ana binasına aktığı ve bunun yapım malzemeleriyle onarımının mümkün olmadığı haller ise daha ağır bir riske yol açar. Bu beraberinde pompaların ihtiyaç duyduğu enerjiyi takviye edecek dizel jeneratörleri kullanımı olumsuz sonucunu getirir; Bu jeneratörlerin sürekli yakıt takviyesi yüksek maliyet gerektirdiğinden; özellikle çatışma halindeki bölgelerde gerekli yakıt sağlamak imkansız hale gelmektedir. Buna ek olarak, dizel jeneratörlerden artan oranda gaz salınımı doğayı olumsuz olarak etkilediğinden, teknolojinin gelişmesiyle soruna tam bir çözüm getirilmesi ve tüm olumsuz durumların ortadan kaldırılması gerekmektedir.

Bu çalışmada bu sorunlara optimal ve en verimli çözüm bulmaya çalıştık. Bunu yaparken her zaman kullanımı mümkün temiz enerji kaynaklarını sofistike ve sistemin düzenlenmesi ve dengesi bakımından yüksek oranda verimli bir sistem dizaynını birlikte kullandık.

Pompalar yüzey suyunun akışındaki dalgalanmalara paralel olarak düzensiz aralıklarla açılıp kapatılmaktadır. Bu sebepten, stabiliteyi oluşturmak ve sistemin işlevselliğini artırmak adına profesyonel kontrol mekanizmasına sahip bir batarya sistemi kullandık.

Kontrol sistemi, baraj sistemine gerekli enerjiyi sağlamak için batarya sistemini ve barajın ana türbinlerini kullanarak yenilenebilir enerji kaynaklarının çalışmasını düzenler ve barajdan üretilen enerjiye elektrik sağlamak için temiz kaynakların enerjisini ekler. baraj çalışması durumunda şehirler, denetleyici, acil durumlarda

kullanılan dizel jeneratörü kullanmadan sistemin çalışması için en iyi çözümleri bulacaktır.

Anahtar Kelimeler: Akıllı Kontrol Sistemi, baraj yer altı suyu, temiz enerji, hidro enerji, güneş enerjisi, rüzgar enerjisi, Homer programı.

CONTENTS

M.Sc. THESIS EXAMINATION RESULT FORM ii
ETHICAL DECLARATION iii
ACKNOWLEDGMENTS iv
ABSTRACT v
ÖZ vi
NOMENCLATURE xii
LIST OF FIGURES xiii

CHAPTER 1 - INTRODUCTION 1
1.1 Problem Statement 8
1.2 Motivation 9
1.3 Objectives 9
1.4 Methodology 10
1.5 Why PIC Microcontroller Processor 10

CHAPTER 2 - LITERATURE REVIEW 11
2.1 Energy Overview 11
Introduction 11
2.1.1 Non-renewable resources 11
2.1.2 Renewable resources 11
2.2 Hydro Systems 12
2.2.1 Hydro Resource 12
2.2.2 Hydro System Components: 13
2.2.3 Advantages: 14
2.2.4 Disadvantages: 14
2.3 Solar Systems 15
2.3.1 Photovoltaic Systems 15
2.3.2 PV System Components 15
2.3.3 Advantages of PV System 16
2.3.4 Disadvantages of PV System 17
2.4 Wind Systems 17
2.4.1 Wind Resource 17

2.4.2 Wind Energy Systems 18
2.4.3 Wind System Components 19
2.4.4 Advantages of Wind System 19
2.4.5 Disadvantages of Wind System 20
2.5 The Electrical Grid 21
2.5.1 Electrical Grid Definition 21
2.5.2 Electrical Grid's Components 21
2.6 Hybrid Systems 21
2.6.1 Hybrid System's Components 22
2.6.2 Advantages of Hybrid Systems 23
2.6.3 Grid Connection Power Electronic Equipment 23
2.7 Energy Potential in the HADITHA 24
2.7.1 Hydro 24
2.7.2 Wind 24
2.7.3 Solar 25
2.8 Methodology and Flow Chart 25
2.9 Summary 26

CHAPTER 3 – PRPGRAMMING AND DESIGN OF CLEAN SYSTEM CONTROL 27

Introduction 27
3.1 Microcontroller 27
3.2 Code Vision 29
3.3 PICkit3 30
3.4 Proteus Simulator 30
3.5 Relay 31
3.6 Measuring devices 32
3.6.1 Current Transformer Sensor using with pic microcontroller 32
3.6.2 Battery Power Measurement LM 35 34

CHAPTER 4 – RESULTS AND DISCUSSION 35

Introduction 35
4.1 Basic format of the program 36
4.2 In Case the Dam Stops Working 36

4.2.1 With Micro Hydraulic Turbine, Solar and Wind Turbine Connected 37
4.2.2 The Presence of Micro Hydraulic Turbines only. 43
4.2.3 The presence of wind energy only. 45
4.2.4 The Presence of Solar Energy only. 48
4.2.5 Supply Load of the Batteries 51
4.2.6 With Insufficient Energy from all of Hydraulic, Solar and Wind Energy as well as Batteries (Case of Emergency) 52
4.3 In Case the Dam is Working 57

CHAPTER 5 – MODELS AND METHODOLOGY 61
LOCATION PROPERTIES AND COMPONENTS BEING USED 61
5.1 Hydro Turbine 61
5.1.1 Installation method and work 62
5.1.2 Hydro Features 62
5.1.3 Generator 62
5.2 PV System 63
5.2.1 PV Cells Work 64
5.2.2 Cells, Modules& Arrays 65
5.2.3 Types of Solar Panels 65
5.2.4 Installation of solar panels 66
5.2.5 Inverters 66
5.3 wind turbines energy 67
5.3.1 South and South-Eastern Wind Sector: 67
5.3.2 Converter (AC-DC / DC-AC) 68
5.4 The Electric Load: 68

CHABTER 6 – OPTIMIZATION OF CLEAN ENERGY EFFICIENCY USING HOMER 69
6.1 Daily Load 69
6.2 The Energy in HADIHA Dam 70
6.2.1 Annual rate of temperature (kwh/m^2/day) 70
6.2.2 Annual rate of wind speed (m/s) 70
6.3 In case the main turbines in the dam stop 70

6.4 In case the main turbines work in the dam 73

CHAPTER 7 - CONCLUSION..... 74
FUTURE WORK..... 74
REFERENCES..... 75
CURRICULUM VITAE..... 78

NOMENCLATURE

Roman Letter Symbols

Equation 2.1 Hydro power

Q the average of flow rate equal m^3/s

V flow velocity m/h

A cross-sectional area/surface m^2

Equation 2.2 Wind power

C_p Power coefficient

P Air density

A Area swept by the wind

V Wind speed

Equation 3.1 Current calculation

I current

CT current transformer

Turn Number of coils

LIST OF FIGURES

Figure 2.1 Hydro Systems and the Components……...……12
Figure 2.1 Hydro Systems and the Components……...…….18
Figure 2.3 Hydro-Wind and Solar Hybrid System……...…….22
Figure 2.4 Wind Map for HADITHA……24
Figure 2.5 GHI Map for HADITHA……..25
Figure 2-6: Flow Chart of the process……...26
Figure 3.1 PIC Microcontroller……..28
Figure 3.2 MikroC PRO for PIC programming…….29
Figure 3.3 PICkit3……..30
Figure 3.4 Proteus Design program……...31
Figure 3.5 Relay……31
Figure 3.6 Current Transformer Sensor……33
Figure 3.7 LM35 Temperature Sensor……...……34
Figure 4.1 The Basic Format Of The Program……..…….…….....36
Figure 4.2 Best Case……...…….……..37
Figure 4.3 Excess energy from total of hydropower, wind and solar energy……38
Figure 4.4 Without Excess energy from total of hydropower, wind and solar ……..39
Figure 4.5 All sources are working, Excess power only from micro hydro……..…40
Figure 4.6 With Excess Power from Wind Turbines…….41
Figure 4.7 With Excess power from solar panels……...42
Figure 4.8 With Excess Power……...43
Figure 4.9 With Enough Power……..44
Figure 4.10 With Insufficient Energy Generated……...45
Figure 4.11 With Excess Power……46
Figure 4.12 With Enough Power……..47
Figure 4.13 With No Enough Power……..48
Figure 4.14 With Excess Power…….49
Figure 4.15 Enough Power…….……50
Figure 4.16 No Enough Power……..51
Figure 4.17 Supply Load of the Batteries……..52
Figure 4.18 No enough energy from all sources……53
Figure 4.19 No Enough Power from Hydraulic…….54

Figure 4.20 No Enough Power from Wind Turbine……..55
Figure 4.21 No Enough Power from Solar Panels…….56
Figure 4.22 With No Enough Power from all sources as well as Batteries……...57
Figure 4.23 In Case the Dam is Working……..58
Figure 4.24 In Case the Dam is Working with solar and wind…….59
Figure 4.25 In Case the Dam is working with wind only……..59
Figure 4.26 In Case the Dam is working with solar only……..60
Figure 5.1 Hole Bulb Tubular Turbine……..63
Figure 5.2 PV System……64
Figure 5.3 Diagram of a photovoltaic cell……..…64
Figure 5.4 Photovoltaic cells, modules, panels and arrays……65
Figure 5.5 Wind turbine system…….68
Figure 6.1 Daily profile……..….69
Figure 6.2 Annual rate of temperature (kwh/m^2/day)……..……..70
Figure 6.3 Annual rate of Annual Rate of Wind speed (m/s)……70
Figure 6.4 Wind And Solar Schematic……..71
Figure 6.5 Monthly Average Electric Production……..…71
Figure 6.6 State Of Battery Charge……71
Figure 6.7 Small Hydro Turbine, Wind Turbine And Solar Schematic……72
Figure 6.8 Monthly Average Electric Production……..72
Figure 6.9 with Diesel generator……72
Figure 6.10 Grid with clean energy……..…….73

CHAPTER 1

INTRODUCTION

Depending on the nature of the dam work that has been constructed to generate electricity, the dams in the world face a common problem, the issue of the flow of groundwater to buildings that contain electrical appliances and control systems responsible for the work of the parts of the dam with the impossibility of stopping this water with treated it by the use of building materials, which entails flooding the buildings with water, which means the occurrence of electrical contact and damage to electrical devices and control systems and perhaps the combustion of generators connected with the hydraulic turbines, due to the electrical error that may occur and lead to stop the dam from the production of electric power and stop the control systems responsible for the work of gates and water outlets in the dam.

And to address this common problem between the water dams used to generate electricity in most of the world, we have conducted an integrated study to solve this problem with the most efficient and efficient solution which can be provided in all countries where it was a realistic study was taken at HADITHA Dam, located west of Anbar province in Iraq, based on this study of the reality of the dam can be applied to address this problem in the water dams in any country in the world taking into account the factors affecting the sources of electricity generation in such a system.

HADITHA dam is a water dam that was established on the Euphrates River in the last century. The dam was run and started to work in 1986 which is located about 7 km from the city of HADITHA west of Anbar province in Iraq, which was established for the reasons of tourism and water reservation and control flow of the Euphrates River agricultural purposes and the main and most important objective is to build the hydraulic units to produce electricity Which is considered the second largest source of electric power in Iraq, where six units of hydraulic units were created each unit generating electricity by 110 megawatts, or a total of 660MW

which the Governorate depends on it mainly to supply electricity, where it is the only source of power generation in Anbar province and is fully dependent on it at present it is supplying the residential, agricultural and industrial areas with electric power with public network.

Where the dam was built from several sections, including the main building in the dam, which consists of nine floors, which contain electrical appliances and control systems responsible for the work of the dam parts, such as the opening and closing of the gates, including the gates responsible for the flow of water to the hydraulic turbines for the generation of electric power as well as water discharge gates for the continued flow of water Euphrates River through two pipes located on both sides of the dam with a diameter of 11 meters each If the flow of water is interrupted through the main hydraulic turbines as well as in emergency situations and when necessary to increase the water level of the dam lake when it falls below the required level, Therefore, this main and important building suffers from the danger of the flow of this groundwater to it in relatively large quantities and that the continued leakage of this water leads to the dam stop and it will be out of work, and power outage to hundreds of thousands of people and factories and agriculture will stop, which means the cessation of life in the province, the control stopping of the gates cause of the stop the flow of the Euphrates River This will negatively affect the agricultural and fishery wealth and the interruption of water for millions of people. This means that a real disaster may occur due to this problem (groundwater flowed into the building).

To address this problem, given the large amount of groundwater flowing, two 175kW pumps were used for each, In addition to the system of control and this means that the need to provide electricity 24 hours without interruption it is very important, whatever the reasons and circumstances, Taking into account the use of one of the two pumps continuously and the use of the second in the event of increased groundwater flow and which vary from time to time that is, its work is not continuous, such as the first, so there must be a professional system to regulate the work of these pumps with no waste of any energy.

And because of the passage of the dam in periods stopping the work of the dam and stop the generation of electric power for several reasons, first lack in the amount of water received in the dam lake or for maintenance purposes and the second is the security reasons as the region may go through a period of wars and conflicts as once the area where the dam of HADITHA where it passed through period of conflicts for more than two years with a complete siege on the region where officials were forced to open the gates of the dam to unload the water stock, fearing the dam was subjected to sabotage operations this leads to disaster because the water stored in the dam in the event of a crashed lead to submerge of many areas and this leads to the deaths of hundreds or thousands of the population and the occurrence of a real disaster and this requires a second energy source to supply the pumps and the system responsible for them, with supply some gates and main offices with electric power to avoid sinking the building In this case the diesel generator should be used continuously if the dam is stopped, and with taking into account the amount of fuel that need to required it to provide and the crisis to operate the diesel generator continuously is a large quantity this can be considered almost impossible or extremely difficult in such circumstances, so the officials were forced to keep one of the hydraulic turbines operating continuously to generate electricity. And this is considered a risk, with the exception of war and conflict situations, the problem is no less important given a large amount of fuel required as fuel prices rise and transfer process, maintenance operations are required for generators and labor to operate the generator and continuous monitoring.

In addition, there are shut down operations where the main hydraulic turbines stop generating electricity even though the flow of water continues and continues to operate in such a case, a second source is required, and this source must be available 24 hours a day throughout the year to restore power generation in this case (shut down), and in all cases.

To solve these problems, which have a big negative effect on the dam, a second source of electricity should be provided with the lowest material losses and on a continuously, and with the spread of clean energies and easy access and use it, which generate electricity at an operational cost can be considered zero, where the use of

natural forces and convert them into electrical energy and Clean energy is considered the best options with a system of control and professional organization and Quick response to any change in electrical sources or from loads with using the sensors and the best modern methods, taking into account that the control system at a very low cost and a rapid response to any change in comparison this control system with the other systems, This integrated system to the power generation from natural forces with control system can be used anywhere in the world to produce electric power.

The other thing is that it does not cause pollution to the environment and this is very important in the present time, especially with the spread of environmental pollution and so-called global warming Which has a big negative impact on human life and causes a lot of diseases due residues from factories, cars and stations that use fuel all kinds it to work This is due to the gases produced by fuel combustion. Where the station that we hope to build in the water dams in different countries of the world maintains a clean and pure environment and the only cost is the cost of purchasing and building the system. Therefore, we hope this system that it is the best solution to this problem, Where it provides the required electrical power and the alternative at 24 hours a day that will replace the dam's energy if it stops as well as benefit from them even in the case of the work of the dam and the generation of electric power, that is to benefit from the generation of electricity at zero operational cost at all times and in all circumstances, especially the conditions of war and conflicts, which is clean and available at any time In the case of dam work and power generation, the system adds the energy generated from the sources of clean electric power to the energy generated from the dam, which provides the residential and agricultural areas and factories with electric power, without wasting any energy.

Where small hydraulic turbines are used with solar panels and wind turbines to produce electric power with a battery system. And in order for the system to be perfect and deals all emergency conditions that may occur, the diesel generator is used in emergency situations, this requires a perfect system of professional control, and regulation that responds quickly to any change in energy sources or loads, In order to be a professional system and organize the work of the two pumps based on the amount of groundwater flowing and supplying it with the required energy

without the need to use the diesel generator, especially that the second pump is used in part, at sometimes, if the groundwater flow is increasing.

Clean sources

Firstly source, the use of small hydraulic units in the case of stopping the dam and the closure of the main gates where are using two pipes with a diameter of 11 meters each, which are located on both sides of the dam where they are used to pass water and the continued flow of water Euphrates River after the dam as this water is high pressure and it is converted to the river and with the impossibility of Construction of hydraulic units directly on this tube to produce electrical energy for design reasons, where is possible to build the small hydraulic units on the stream of water flowing from the tube that used to maintain the flow of river water in the event of closure of the gates of the dam, where these turbines operate with high efficiency and stability, can be considered them constant at any time is used this tubes to pass water as the amount of water flowing through these tubes are often in a fixed amount and pressure can be considered a fixed, taking into account that the only cost is the cost of buying and construction of small hydraulic turbines with Stability of the electricity generated from it, this positive thing drives us to build more of small hydraulic units.

But the thing that can be considered negative for these turbines, that these units work only if the dam stopped working and divert the water flow to the tubes that the turbines operate on it, and that these conditions are exceptional circumstances that may last for specific hours or days and may continue for months in some other circumstances and then stop These units, as well as in case the arrival of water stored in the dam to 118 meters above sea level Where the dam stop on the production of electric power in case the level of water stored in the dam reaches 118 meters above sea level or less than, so the main gates in the dam are closed and the gates of these tubes are opened in small amount of water, to increase the water level in the dam as these small hydraulic turbines may stop working or may work, The resulting electric power is very small and is not sufficient to supply the power to the pumps and the control system of the dam, as well as in case the occurs of (shut down) where the dam stops to generating electricity for a period of time and the small turbines have

been stopped In addition, they cannot advantage of them except for these exceptional conditions which may last for several days or in emergency situations that may be several months. Compared to other clean energy sources, other energy sources are better for use and especially as it is constantly available and in all situations where it uses the natural strength, Compares this source with other clean energy sources, The other energy sources are best from it to use and especially they are available continuously and in all conditions, Therefore, a limited amount of this energy is used.

The second source, which is be constructed on the HADITHA dam (and in all dams of the world) to generate electric power is solar energy where it is a more realistic option in this system, which works continuously in sunny times and with high efficiency where the average temperature In a modern dam area that is close to 25 ° C. Or the approximately from it where the ideal temperature of the solar panels is 25 ° C to generate electricity from it. As the solar panels depend on the sun rays to generate electricity and not on the temperature, taking into account the lines of solar energy, as it is worth mentioning that with high temperature or decline than the average limit affects negatively on the amount of energy generated, especially that the province of Anbar, The temperature reaches 50 ° C, unlike the dam area.

But with this efficiency in the generation of electricity from solar panels, but the negative thing in this energy is to stop production of electricity after the sun site of the sun, it stops the generation of electricity from solar energy at night as the sunny time is estimated to approximately 11 hours a day, the sun be absented in the remained time from the day therefor cannot rely fully on this energy with the comparison with the constant need for electricity to supply the pumps and system. The solar panels also stop generating electrical energy in whole or in part in the case of clouds existence, ie, the energy generated may be very few in addition to the negative impact of dust, which negatively affects the generation of energy, which requires washing the panels in the event of dust existence, and taking into account the positive side In this energetic and compared with other sources, therefore, it is not possible to rely entirely on this source. So a limited amount of this energy is used, that is determined by studying the conditions affecting the generation of

electricity from this energy and the times required to supply the electricity compared with the pros and cons of all sources used in the same place with the conditions affecting each Source.

The third source can be used to generate electricity continuously and 24 hours a day and all year round is wind power (wind turbine) to generate electricity, where the wind turbines are used to convert wind energy into electrical energy using the built-in generator with the turbine depending on the wind speed, where the wind is continuous in the dam area, which can be used to generate electricity continuously, unlike the solar energy that stops at the sunset. Taking into consideration the dam's need for electric power on a continuous basis, wind energy is a more ideal option to provide the required electrical power continuously, but with this efficiency in the generation of electricity from wind energy, but the negative thing in this source, that cannot fully rely on it is the wind speeds are not enough to generate the total electric power of wind turbines as the amount of electrical energy generated may be half of the total energy or less in many times as the wind speed fluctuated from time to time where it can be a low speed and that means generating may be small amount Of electricity and non-fixed amount compared to the amount of energy required to generate it and compared to the normal conditions so must use a certain amount of wind energy taking into account the wind speed in the dam area and compare with other sources and The times when the solar energy is present and the amount of power required.

Through the realistic study we conducted in the HADITHA Dam area (which will be discussed in detail in Chapter 2) and taking into consideration the conditions affecting the generation of each source of electricity generation and comparing it with the continuous demand for power supply, Taking into account the use of one of the pumps and supply the control system in the dam with electric power continuously and the use of the second pump in times of need (in case of increased leakage of groundwater), the continuation of the operation and shut down the second pump between time to time, taking into consideration this issue with the possibility of stopping one Sources in whole or in part at any time so require the use of another

source (Battery system) to address these cases and supply of electricity if there is a shortage of total energy required.

The battery system with intelligent control system to regulate is very necessary to compensate for the shortfall that may occur and ensure the provision of electric power at all times 24 hours in all conditions that may occur in the year seasons with the use of sensors to determine the upper limit of water, where the second pump is operated, as well as the minimum level of water for which the second pump is turned off, where the battery system works on charging in the case of excess electrical energy and reversing the process if occur shorting in energy, the energy that is previously stored is used. Where the total energy generated is less than the amount of energy required to operate the two pumps with the dam system so it is compensated for the energy that was stored in the batteries while the second pump was parked (for example). To ensure the stability of the system and the continuation of the work of pumps and control system is used diesel generator With working to make the system supply electricity at all times and cases without the use of diesel generators, and consider the diesel generator for emergency case only, which will be explained in detail in the fourth quarter.

1.1 Problem Statement

With the continued flow of groundwater to the main building of the dam where must the continued use of pumps to get rid of this water and continued energy consumption to provide these pumps with electricity if the dam stops production of energy. Where use the diesel generators, which have a negative impact on the environment in addition to the high material losses, as well as the diesel generator may not be operated in certain conditions, which foreshadow a disaster.

In order to solve this problem and to treat all risks, an integrated, idealistic, and high-efficiency control system is used. Where the hydraulic, wind and solar energy is used to generate electricity and supply the load with the required power. And to make this system a best possible, the battery system is used to cope with the bad conditions that may occur for the energies that used to generate electricity. And use the diesel

generator if occurs any bad situation unexpectedly for the energy sources, using a system of control and professional organization.

1.2 Motivation

The pure power plants are ideal systems with the ability to provide electricity with the lowest operating losses where 24 hours a day of electricity are provided where they can be built near the center of the dam and the wind and sun speed in the dam is very suitable unlike other areas in the city while maintaining a pure environment, as well as maintain on a pure environment especially that fuel-powered stations are a major cause of environmental pollution and consider diesel generators to be an emergency to cope with energy shortages if this happens. This system provides greater efficiency and flexibility for planning, construction, and environmental benefits compared to other stations that require maintenance, fuel and a large number of workers to work and its impact on the environment. Diesel generator maintenance costs are reduced due to improved operating efficiency and reduced operating time of diesel generator, which also means lower fuel consumption. And it is also easy to expand these systems and increase their capacity to meet growing demand in the future.

1.3 Objectives

The main objective of this work is:

- To Construct a clean system (hydraulic, solar and wind and battery system) with a diesel generator, to conduct studies to obtain the best possible energy with minimal operational losses and the possibility of adding other sources and make the system able to supply the load power without the use of diesel generator.
- To design a smart control and management system to control the system for getting maximum energy using variable power generators to simulate the practical reality of all circumstances.

- To conduct an integrated study of hydraulic, solar and wind energy with batteries in addition to the control system to provide an integrated system that can be applied to provide electricity to dam system (pumps and gates).

1.4 Methodology

Programs used to complete the project:

- Code Programming (Micro C).
- Proteus Simulator for Circuit designing.
- Homer Software for solar and wind simulations.

1.5 Why PIC Microcontroller Processor

There are many different control systems that can be used with their own programming. Due to the increasing sophistication and progress in the use of renewable energy, the best way to programming the system with changes in solar and wind energy is to find the best solutions to make the operating cost close to zero. (Microcontroller 16F877A) or similar types of the same generation is the most efficient and fastest response and can be programmed with the programming (MikroC) to give the best solutions through the ideal programming in addition to some other elements price A simple, fully configurable circuit can be set up to control, open and close sources with load at a total cost of not more than 50 dollars for control system with cost of voltage sensors and circuit conductors for this systems or any system such as large system compared with other subsystems that may exceed (2000 dollars) such as PLC system.

CHAPTER 2

LITERATURE REVIEW

2.1 Energy Overview

Introduction

The term ―Energy is defined as the ability to produce work. Energy is a compound word and comes from the Greek words: en + Ergon, which mean work inside a body. The normal technical definition is that energy is the capacity or ability to do the work. A more scientific definition of energy was given by the famous physicist Max Planck―The ability of a system to produce outside activity.

Energy is a thing that we cannot touch, see, hear or smell. People and civilizations couldn‘t survive without it. The energy a basic component of our day-to-day life. Nothing can occur without energy. We rely on a huge selection of different methods, which it seems in nature. Organisms need the power to move and order for machines work; it needs the energy to do as well [2].

2.1.1 Non-renewable resources

Reliable enough resources of energy certainly are a necessity for industrialized nations and for life. Energy can be used for heating, cooking, manufacturing, and transportation. Energy could be generally categorized as non-renewable and (renewable or clean). Over 85% of the energy found in the globe is from nonrenewable supplies. Many developed countries are reliant on non- renewable energy resources such as for example, fossil fuels (coal and essential oil) and nuclear energy.

2.1.2 Renewable resources

An alternative solution to the nuclear and fossil gasoline power is renewable energy technologies (hydro, wind, solar, biomass, geothermal, and ocean). Widely hydroelectric projects have grown to be increasingly difficult to bear through recently because of competing uses of land and water. Relicensing requirements of existing hydro plants could even result in removal of some dams to safeguard or

restore wildlife habitats. Among the other renewable power sources, wind and solar have observed a rapid growth all over the world recently. Having a wide geographical pass on, they can be generated close to the load centers, thus concurrently eliminating the necessity of high voltage transmitting lines running right through urban and rural landscapes [3].

2.2 Hydro Systems

2.2.1 Hydro Resource

Hydroelectric energy is derived from compressed waterpower, where the dam stores a large amount of water with a relatively high level enough to generate pressure on the hydraulic turbines installed at the bottom of the dam. Hydraulic turbines, in turn, convert the energy of compressed water to mechanical energy (kinetic energy and water pressure), which in turn is used to rotate the generator, which converts mechanical energy into electrical energy. Figure 2.1 shows the hydro system [10].

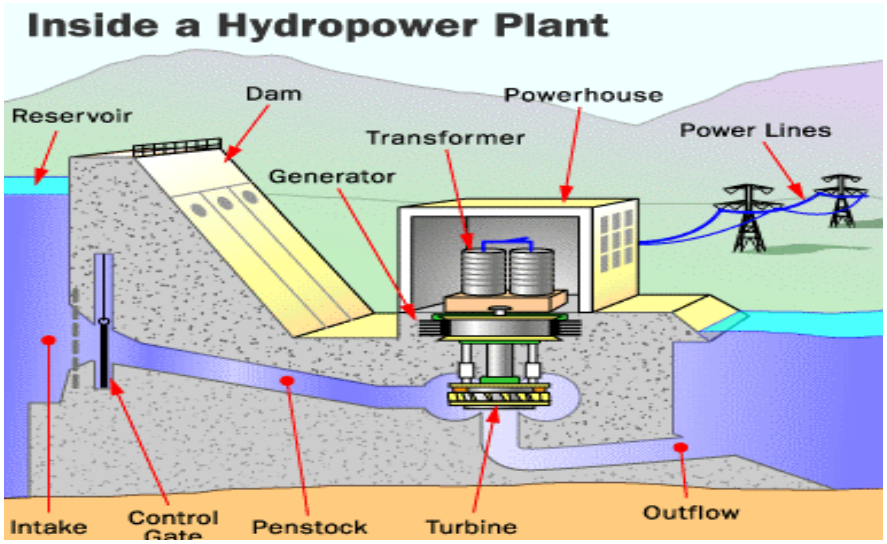

Figure 2.1 Hydro systems and the components

$$A = \pi D^2/4 \qquad \textbf{(2.1a)}$$

$$V = Q/A \qquad \textbf{(2.1b)}$$

Equation 2.1 for calculates cross-sectional area.

2.2.2 Hydro System Components:

2.2.2.1 Dam & water reservoir

The dam is used to store water in order to increase the capacity of the amount of water trapped behind it, whenever the dam higher, the greater the amount of water and pressure.

2.2.2.2 Penstock

It is a tube slanted between the top and bottom of the dam take the water from the top of the dam to the entrance of the turbine, where the water runs through this tube very quickly.

2.2.2.3 Turbine

The turbine and the generator are usually in one place where the generator is mounted above the turbine and when the valve is opened at the bottom of the pipe, the water flows very quickly, and the water is pressed on the turbine blades and the turbine rotates, where the rotor rotates in the generator connected to it. Since the rotor rotates, its files are fed by continuously current, where produces a fixed magnetic field, as the rotor rotates, the fixed magnetic field turns into a rotating magnetic field, this rotor field cuts of the files of the fixed member produces an induced electric motive force (e.m.f). The cause is the passing of current in the files of the constant member, the electric energy is generated.

2.2.2.4 Outflow tube

After the water flow to rotate the turbine, must be pulled out quickly and smoothly so as not to hinder rotation, so the tubes are placed in special shapes to pull them out as quickly.

2.2.2.5 Auxiliary equipment and machinery

Hydropower stations need to be equipped with a variety of auxiliary machines such as pumps, gates, switches, rotational gear, in addition to transformers and transmission lines, etc.

2.2.3 Advantages:

- One of the sources of renewable energy, where the hydropower can be used repeatedly.
- Compared to different sources, turbines are less operational cost.
- It has high efficiency.
- It is fully controlled, where dam gates can be opened when electricity is needed and closed in case of no need for electricity.
- Water dams are used for very long periods to electricity generation and also important to control agricultural, animal and other.
- Do not cause pollution to the environment.
- Another positive thing about the dam is: its use of tourism.

2.2.4 Disadvantages:

- The initial cost of constructing the dam on which the turbines operate are very high. And it takes decades of work to become profitable.
- To build the dam it is possible to destroy the environment at the site. Where the large dam causes geological damage.
- It can be built in a few places and specific where there is a suitable amount of water.
- There is a flow of groundwater to the dam structure and this is a great danger that leads to the dam stopped working
- In the event of a dam crash, the water will sink entire cities and much of the population because of the dam is old or because of the conflicts that threaten the dams [10].

2.3 Solar Systems

2.3.1 Photovoltaic Systems

A system utilized to transform solar radiation into electric power directive. On the inside of a solar powered energy system or a solar electric system also, is solar cells of panels which are interconnected to create the solar module (solar power panels) and a solar array. The configuration and size of something depend on its intended task. Arrays and modules cube utilized to charge batteries and supply the load to operate motors, and to power a variety of electrical loads. With the required power conversion tools, solar powered energy program can produce an alternating electric current (AC) appropriate for any conventional appliances and can work in parallel with, and interconnected to. Among the components of a complete solar power system may be a DC-AC power inverter, a battery bank, an operational system, and electric battery controller, auxiliary energy resources and occasionally the specified electric load (appliances).

2.3.2 PV System Components

PV system essentials:

- Panels: Photovoltaic panels are the largest PV system costs. Their placement and mounting affect the operating system performance a lot more than any other element of the system.

- Mounting apparatus: Mounting PV panels is normally of critical importance. Initially, there is a need to install solar panels where they'll get optimum sunshine during the period of a year. However, the more difficult issue is to increase their viability so that can stay it for 25 years or more.

- DC-to-AC inverters: Inverters divert the low voltage and high-current signals from the PV panels and convert them into 240 VAC (or 120 VAC), which is compatible directly with the power station. From a reliability standpoint, they will be the weak link in virtually any PV system generally, so quality is crucial.

- Disconnect switches: Disconnect switches are of critical impressive at work, they need to be installed within easy reach.

2.3.3 Advantages of PV System

- The energy source for photovoltaic, sunlight, is infinite practiced, free, and accessible easily.
- Photovoltaic panels are reliable and require little easy maintenance even in harsh conditions.
- Photovoltaic systems are also versatile in that they can become stand-alone, regional grid, central grid-linked or even hybrid (together with other systems like wind or hydro) systems.
- Photovoltaic systems are a perfect choice and grow to be cheaper for applications especially from the grid as infrastructure costs of electricity transmission where be avoided.
- Photovoltaic systems work ideally in the time when the energy required is greater than the rest of the time, i.e. during peak energy demand per day. This reduces the losses of the infrastructure of the electric stations, as well as the fuel used to supply the work of factories, companies, and constructors with power.
- PV systems are modular that easy to add more energy at any time need to eat.
- Solar systems are set to continue operating for a period of not less than thirty years, the energy is also generated without movement in the system and therefore does not create any noise.
- Transform solar energy into electricity that does not accompany it any emissions polluting the environment or combustion processes or radiation activity or temperature.
- Photovoltaic systems do not need much time to install them.
- Solar system has a wide community acceptance and the safety record is excellent.

- PV system is a green technology and is a key factor in getting rid of global warming, global warming and reducing global emissions.
- Photovoltaic industries provide additional employment opportunities where they help in the economic development of communities [4].

2.3.4 Disadvantages of PV System

- The main problem that may hinder the spread of photovoltaic cells is the relatively high cost of buying compared to most sources, despite the low prices in recent time with the advancement of technology.
- Although sunlight-reaching earth carries energy even 6,000 moments greater energy compared to the global requirement, the energy density of sunshine is low relative, where they are less suitable for small loads compared to the energy they need.
- Energy generated from solar systems varies depending on the availability of sunlight, where less energy generated in the areas where the clouds and dust are abundant and which are short days and all this takes into account.
- Which increases the cost of setting up solar energy is the price of batteries, which are necessary to store electrical energy generated by solar energy, and improving the functioning of the system.
- The low efficiency of the photovoltaic energy may reach 14%-25% and is one of the reasons for increasing the number of solar panels used and hence the increased cost, as the technology works to increase this efficiency.
- In spite of the popularity of the concept of solar energy, there is a wide shortage of knowledge, and hence, faith in this technology. Confidence in this technology will be gained through education and examples.

2.4 Wind Systems

2.4.1 Wind Resource

Wind energy is derived fundamentally from solar energy via a thermodynamic process. Sunlight works to warm the earth and this leads to high air, the pressure difference depending on this process causes the air to move from place to place,

producing air movement (wind). Wind rates vary by different regions of the globe, where areas with high wind rates are more attractive to take advantage of this power:

From the theoretical side, where the force that can be extracted from the wind is proportional to the speed cube, however, the capacity that can be extracted in practice is somewhat less than the fit of the relationship with the cube speed, according to Equation 2.2.

$$P=C_p 1/2\ p\ A\ v^3 \qquad \textbf{(2.2)}$$

From ***Equation 2.2*** the power in the wind is proportional to:

- The area of the windmill being swept by the wind.
- The cube of the wind speed.
- The air density - which varies with altitude.

2.4.2 Wind Energy Systems

Electricity generation from the mechanical process of wind power is of great benefit and involves the passage in many processes with characteristics characteristic of each. Some of these processes are well developed, others less. Figure 2.2 shows the wind system.

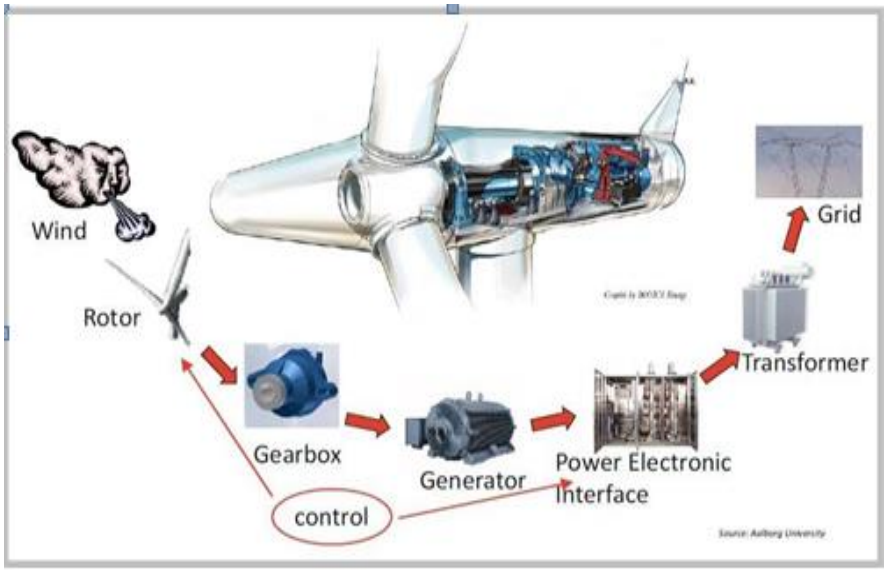

Figure 2.2 Wind system

2.4.3 Wind System Components

- **Turbines**

Most wind turbines operate horizontally and in the opposite direction of the wind, depending on two or three of the blades installed vertically on the axis of the turbine, they are often made of composite material such as glass fiber. There are limited uses vertical turbines that are suitable for surface air currents.

The Turbine consists of the structure that carries the generator, the tail and the vertigo that carries the feathers, where the amount of energy generated is dependent mainly on the diameter of the rotor (feathers), and the amount of wind that the Turbine will be exposed, the violence keeps the Turbine in the wind direction.

- **Towers**

Because wind speeds are better in a high level in many areas, the towers are used to carry the wind turbines at relatively high altitudes, where wind ability is increasing on electricity generation, compared to the lower levels, For example, the generation capacity of a 10 kW generator can be increased by 25% by raising the Turbine from 60 feet to 100 feet but the cost increases by 10% of the total system.

There are two main types of towers used in the wind turbine system: self-supporting (free-position) and guide.

Angled taut towers are used slanted down in small systems where they are often used in home systems as they are less expensive and easier to install but require space for installation. The radius of the tower is half to three-quarters of tower height usually 10 kilowatts or less, also can reduce the risk of hurricanes on the towers by lowering it to the bottom and thus avoiding breaking the towers such as aluminum towers [1].

2.4.4 Advantages of Wind System

- The wind energy is infinite (free) and with modern technology, it could be captured efficiently.

- In case wind turbines are built و and started by producing electric power, they do not cause any environmental pollution as no gas.
- Although the size of some turbines is relatively large, it takes only a small area to install a tower with a high altitude, so do not lose a large area of land to install the tower and especially in agricultural areas.
- Many people looking to use wind farms where they find it an interesting attribute of the landscape.
- Wind turbines are an ideal solution for supplying remote areas where it is difficult to build electricity transmission lines to it
- Wind turbines play an important role in both the development and the third worlds.
- One of the most important features of wind turbines is its presence in different sizes, which can be used to meet personal demand such as houses and can supply companies, factories, and cities with electric power [5].

2.4.5 Disadvantages of Wind System

- The amount of electrical energy generated by wind is not constant, that may be at full capacity and may be zero because there is no fixed wind speed, which is between zero and storm. Where they see it as structures an ugly and distort the landscape of the countryside
- Many people feel that nature should not be compromised and that these huge structures should not be built, to enjoy nature.
- Large turbines are noisy, it is possible that each turbine generates noise similar to a family car noise at a speed of 70 miles per hour.
- To provide large communities it needs to use a lot of turbines units ie needed a lot of lands [5].

2.5 The Electrical Grid

2.5.1 Electrical Grid Definition

The electrical grid is the extension of the interconnected wires, with uses the transformer at times to connect electrical energy from the generation sources to the load centers. Grid Tie means that the system connects to the public electricity network. Off the grid means, the system is not connected to the public network.

2.5.2 Electrical Grid's Components

- Electrical power stations are divided into two main sections: the first fuel-powered stations (natural gas, coal, biomass), second, the stations working by clean energy (hydropower, solar, wind, nuclear). Interconnecting transmission lines for the transmission of electricity from power sources to load centers.
- The transformers used to regulate the voltage to supply the load [6].

2.6 Hybrid Systems

Hybrid Power systems combine two or more power sources with power conversion devices to be an integrated power generation system to overcome the conditions that may occur for one of them as this system includes many components of electricity generation, with one intelligent control system that makes the system provides energy with the required quality. Figure 2.3 shows the hybrid connection. Power can be generated using clean energy sources like hydropower, wind turbines, photovoltaic, solar thermal, wave power or biomass power stations [7].

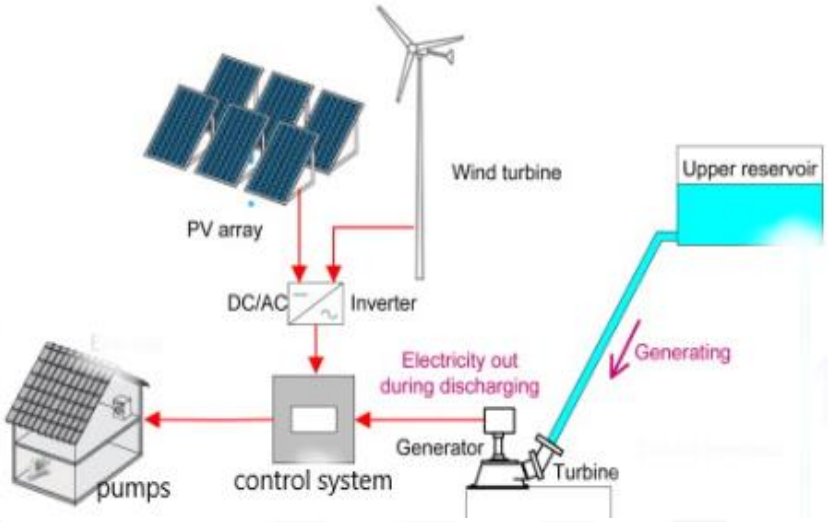

Figure 2.3 Hydro, wind and solar hybrid system

2.6.1 Hybrid System's Components

The hydro-wind-solar hybrid system mainly consists of hydraulic turbines and aero generators along with solar panels of suitable capacity with charging controller system, inverter, battery bank, etc. to supply AC power.

- Hydraulic turbines are often installed in water dams where the Concrete water barrier is constructed. The turbine is placed at the bottom of the dam, where it is subjected to relatively high-level water pressure, and it can be built in the waterfalls where the water flows from the top, Hydropower turbines are also used in the river where water flows are used, where the power of running water is used and can be used sea waves to generate electricity.

- Solar panels (PV module): where many solar panels are connected in a matrix of several chains to determine the amount of voltage produced, where it is a DC voltage, as well as the steering of solar panels to produce the largest possible amount of energy.

- Wind Turbine: Wind turbines are installed on a tower, where its length proportional to the level at which wind speed is good to be converted into electrical energy to supply load.

- Hybrid controller: It is designed to take all sources and integrate them into one source of load feeding (hydraulic turbine currents, a continuous current of solar panels, AC / DC wind turbine current, battery system, and usually used a diesel generator).

- Battery bank: The battery system consists of a single battery or a set of batteries to form a system with a suitable capacity to make the system work reliably with an intelligent controller to ensure that the system works perfectly.

- Inverter: It converts the constant current (DC) from the solar panels into an alternating current (AC) to supply the load [8].

2.6.2 Advantages of Hybrid Systems

- Hybrid systems can address limitations in terms of fuel flexibility, efficiency, reliability, emissions and/or economics.

- Use of repeated techniques to achieve a high level of reliability with/or without a storage battery system, as some hybrid systems include both of them, where it improves quality and energy saving.

- Hybrid systems are designed to use various clean energy sources to the maximum, while reducing the use of traditional sources with the negative impact on the environment in addition to the operating cost of them, such as fossil fuel generators.

- Hybrid systems are being designed to achieve the desired characteristics at the lowest cost, this is why demand for hybrid systems is increasing [9].

2.6.3 Grid Connection Power Electronic Equipment

DC-AC/AC-DC converters are used to solve connection problems of hybrid resources to the grid. The main concern is differences in wind speed and frequency of the system, which forces us to use some interference equipment to improve the frequency and keep it in the adequate boundaries provided by the operator.

The wind systems are used inverters/converters to connect to the grid to facilitate the frequency variations smoothly. Used the rectifiers and inverters to improve the

frequencies and enhance the amplitude of grid connection voltage a swell. Since both the frequency and voltage of connection should stay steady, these AC-DC-AC connections in wind turbines, DC-DC-AC, and connections in photovoltaic cells are used.

2.7 Energy Potential in the HADITHA

The pumps are operating constantly dispose of groundwater, one of them operates continuously from the time and the other pump works partially (when the flow of groundwater to the building increases).

2.7.1 Hydro

Water discharge rate at the lowest estimate of 250 cubic meters per second of the drop pipe 11 meters, which will be used to supply small hydraulic turbines by hydro energy.

2.7.2 Wind

Estimated average wind speed is 3-7 m / s, higher speeds are recorded in a Haditha dam area. Figure 2.4 shows the wind resource in the Haditha dam, where it is planned to use wind energy as one of the sources of energy to supply the pump system in the dam [12].

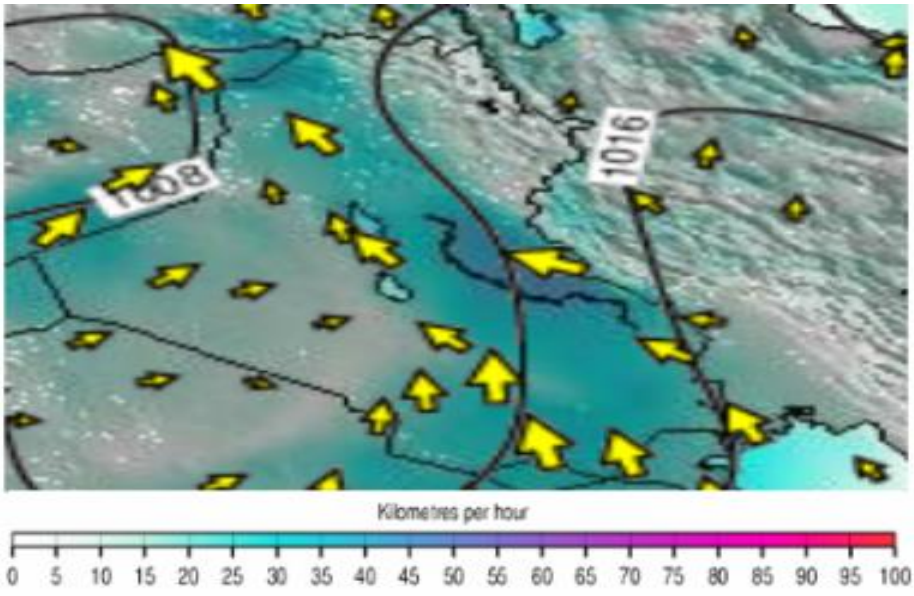

Figure 2.4 Wind Map for HADITHA

2.7.3 Solar

Average solar insolation in the country is roughly 4.8 kwh/ m2 /day, indicating a high potential for solar energy use. Figure 2.5 shows the solar map in HADITHA [11].

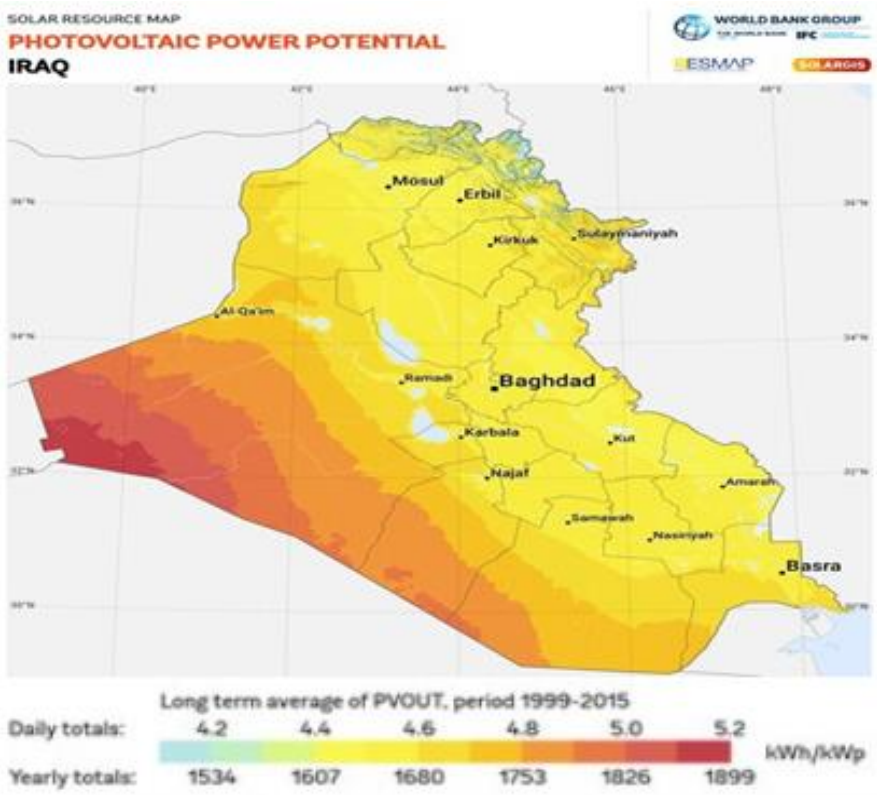

Figure 2.5 GHI Map for HADITHA

2.8 Methodology and Flow Chart

The system depends on the priority in the work, start with checking the availability of small hydro the energy which have the highest priority to supply the load if it has enough power, supplying the load will be followed by calculating the excess power remaining to decide if the battery should be charged or not.

If the small hydro energy wouldn‘t be enough then the wind energy will be the next option to use if it is available and enough for the load, same checking for the excess power will be made. Another option that is available is to use both sources together if the combination Is enough, and the battery might be supplied too. If the small hydro and the wind energy wouldn‘t be enough then the solar energy will be the next option to use if it is available and enough for the load, same checking for the excess power

will be made. Another option that is available is to use all this sources together if the combination Is enough, and the battery might be supplied too. Either of the two sources not available or not enough, the battery unit or the diesel generator - if the battery is empty - maybe used. The Flow-Chart of the system is shown in Figure 2.6.

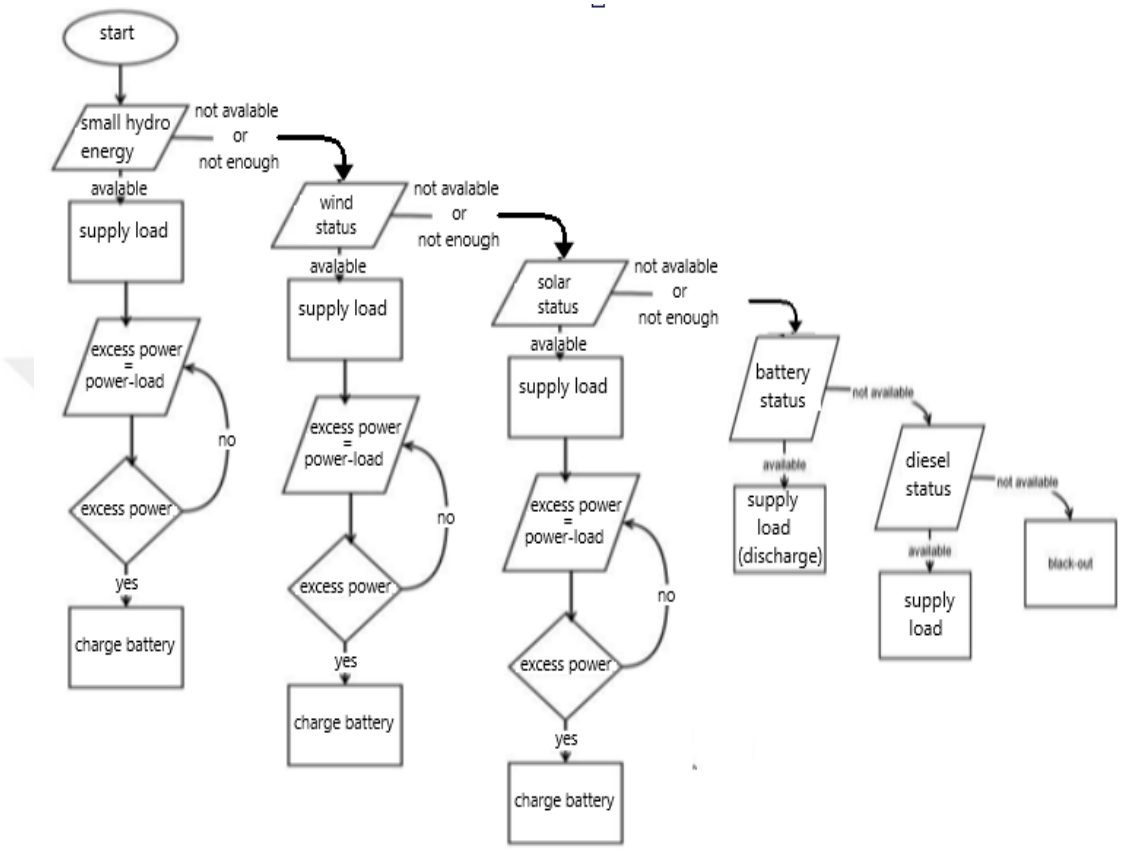

Figure 2.6 Flow chart of the process

2.9 Summary

What distinguishes clean energies is the preservation of a clean environment free of harmful waste and pollution, which is reflected negatively on human life. Compared to traditional sources such as coal and natural gas, 0.75 and 1.05 kg of carbon dioxide are produced respectively to generate the only 1kwh.

The sources of clean energy are safe and unlimited, taking into account exceptional cases, where it's free and found everywhere and the electricity generation from it does not cause any pollution approximately [9].

CHAPTER 3

PROGRAMMING AND DESIGN OF CLEAN SYSTEM CONTROL

Introduction

The program design depends on the realism and accuracy in the work, which works to simulate the solar energy system (micro hydraulic turbine, solar energy, and wind with batteries and generator) with all the professionally with the possibility of the application directly on the ground in terms of programming and parts used.

The need for an intelligent control system is a necessity because there is no ideal in work of the small hydraulic turbine, solar panels and wind turbine generating energy due to several reasons. Where solar energy cannot be work considered zero or generation ratio 100% compared with the presence of sunlight or not because of the presence of many factors that negatively affect the performance of solar panels and this leads to a reduction in the amount of power generated by solar energy, such as the presence of clouds that obscure the sun And the presence of as well as high temperature or lower than the limit working by the panels (25) as well as dust All these reasons have a negative impact on the production of energy as the solar panels working on the sun rays and not on the heat. As well as for wind turbines where there is no stability in wind speed from time to time as well as for changing seasons. There are no solar panels or wind turbines in the Proteus program so we used DC generators with variable resistors to simulate the practical and scientific reality of renewable energies with the diesel generator and batteries. The capacity of any of these generators can be changed at in any moment of the program work to simulate all conditions that may occur for energy hydraulic, Solar and wind. With the possibility of changing the amount of load capacity to be simulate everything in perfectly.

3.1 Microcontroller

A microcontroller is a smart electronic device (decision maker) can be considered a computer on a microchip designed to perform a lot of tasks such as operating and off

and Procedure the equations on the basis of which to do tasks based on the entry signal and many other processes.

The smart control unit is an integrated circuit equipped with the most important parts to make it unnecessary for external devices to carry out all control and control operations and quick processing It contains the CPU and RAM-ROM and consumes little power and its size is very small compared to the computer and other controllers. Rom memory may be ROM, which can be programmed only once and may be EPROM or EEPRPM, which can be programmed several times. Smart controllers are found in many devices used in our lives such as mobile phones, cars, cameras and many devices for the accuracy of their work and speed of their response to external variables to implement certain directives and working on the signals of analog and Digital.

ADC: It translates the information into the analog body into a digital body so that microcontrollers can understand and respond to it.

Many of the sensors can be connected to pins on the terminals of the controller that do not exceed 5 volts, such as current and voltage sensors, heat sensors, motion and humidity, and each type with different programming to calculate the readings required. The microcontroller is shown in Figure 3.1.



Figure 3.1 PIC Microcontroller

Components of Microcontroller

- Central Processing Unit (CPU).
- ROM.
- RAM.
- Input and Output.

- Timer.
- Interrupt Circuitry.
- Buses [15].

3.2 Code Vision

There are many different programming programs, each with a different method, such as (c, c ++, mikroC…), with a special device can be connected between the computer and the controller to load the programming of the controller.

MikroC PRO for PIC programming -Figure 3.2 – is a program developed for the pic family of the microcontroller.



Figure 3.2 MikroC PRO for PIC programming

This program is more advanced than the many software programs that are used to write the programming code that the PIC controller depends on for control and decision making. It is designed to provide the easiest solutions and the most efficient.

This program includes a large group of the library, which includes the basic documents of a large range of different programs, which were designed to keep abreast of developments taking place where any files can be added to the library that are discovered or developed recently [16].

3.3 PICkit3

PICkit3 is a programmer / Debugger for Microchip, where connected between computer and console to load the programming file from computer to console and protect the control unit of high current and voltage in specific connection method The PICkit3 provides full-speed USB interface and real-time execution to connect the device with the computer with the read/write, memory, and Erase with verification.



Figure 3.3 PICkit3

Some features

- USB (Full speed 12Mbits/s interface to host PC)
- Real-time execution
- Supports low voltage to 2.0 volts (2.0V to the 6.0V range)
- Program up to 512K byte flash with the Programmer-to-Go
- Diagnostic LEDs (power, busy, error)

3.4 Proteus Simulator

Is an application that is used to design circuits and the work of simulators professionally using the intelligent microcontroller PIC and the existence of a library containing most of the parts required to work electrical circuits such as resistors and various sensors and different with the possibility of development of this library by adding any parts are discovered or developed in the future where this program can be divided into two parts the first part is the design, which is done in two stages.

The first is the quick design of the parts in any way possible. The second step is the use of the PCB window within this program which contains all moving images of the parts used to be designed in a professional manner. And the second part is the simulation of any circuit before it is implemented in practice to avoid the error that may be achieved in practice using the intelligent control PIC where the programming code is loaded from the micro program into the controller and the operation of the circuit to simulate the practical reality. In the practical case, the programming code is downloaded from the computer to the controller using a special device such as PICkit 3 which is connected between the computer and the controller to transfer the program file [18].

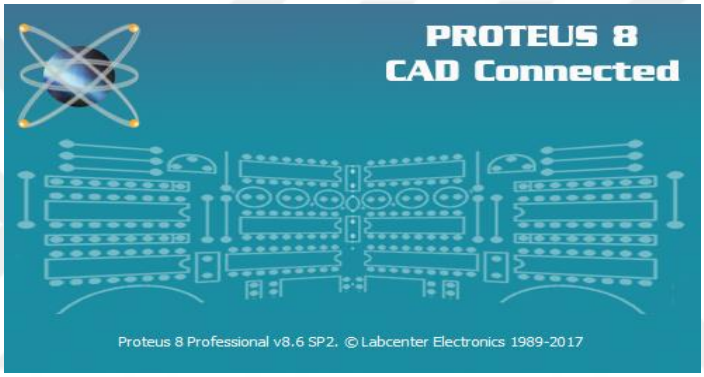

Figure 3.4 Proteus design program

3.5 Relay

Relay is switch open and close the electronic or electromechanical circuits and depend in work on the magnetic circle of attraction, where the electromagnetic circuit voltage can be different from the voltage of the relay and this property is suitable for use with PIC microcontroller, Where the contactor device is connected with the relay where the contactor is very high power suit the required load [17].

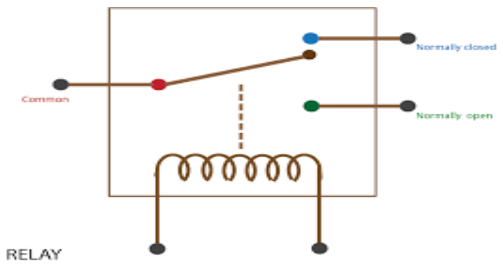

Figure 3.5 Relay

3.6 Measuring Devices

3.6.1 Current Transformer Sensor using with PIC Microcontroller

Current transformers are sensors to measure the current and are of great importance to know the amount of energy generated and consumed and in particular are important in control systems such as hybrid control system. The current measurement sensor is very similar in coin to the normal current converter, where it consists of two files, the first coil, and secondary coil, but it comes with this sensor one coil which is the secondary coil, but the first coil is the wire that will pass from the heart of the sensor, as this sensor works on the current, which measures the amount of current passing from the heart of the sensor and not on the voltage. Sensitive which are used by the type Loulensy AC Current Transformer Signal-transducer Split Core Input 0-1000A AC Output 0-5V DC.

Specifications of the sensor

- Input: 0-1000A AC
- Power Consumption: =/< 25mA
- Temperature shifting: =/<500ppm/degree centigrade
- Isolation: 2.5kV/50Hz, 1Min
- Linearity: 0.5
- Output: 0-5V DC
- Power Supply: 24V DC +/-15% (other power, such as 12V)
- Hole Diameter: 80mm
- Accuracy: 1% F.S
- Working temp.:-10 to+70 degrees centigrade
- Response time: <200 mS
- Offset voltage: < +/-50mV
- Each 0.005 volts is equivalent to 1 ampere 5V=1000A.

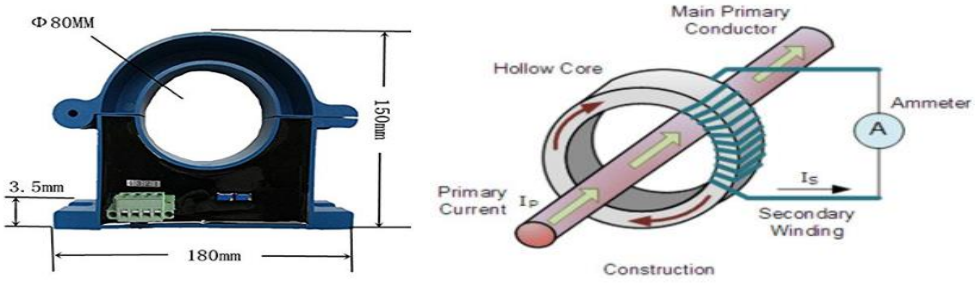

Figure 3.6 Current transformer sensor

C.T. Work

- The wire is considered passing through the heart of the sensor is the primary coil. When the current passes through the wire, a magnetic field is created around it, when the current passes through the wire, a magnetic field is created around it, where a magnetic field is created in the secondary coil depending on the primary coil, so that the magnetic field changes continuously, resulting in the flow of current in the secondary coil, where an appropriate voltage is generated to push the charge generated by the C.T sensor.
- It is very important that the diameter of the wire is suitable for the current to be sensed by the sensor.
- If the wire is too small, the wire should be wrapped with more than one roll around one side of the sensor and in the same direction so that the current is properly sensed and measured.
- If we want to measure the loads in the several wires for different circuits, to measure the total current, the wires must be one-way. If there is a wire in the opposite direction, the current of this wire will be subtracted from the total, where the sensor is taken the current passing in the opposite direction negative signal.
- To connect the C.T. Sensor with mikroC PIC, the output signal must be modified to be appropriate with the ADC microcontroller inputs. The current must be converted to voltage as the controller inputs are rated at 0 to 5 volts.
- Only one pole must pass through the sensitive heart [13].

The current can be calculated by equation (3.1).

$$CT_{\text{turns Ratio}} = Turn_{\text{primary}} / Turn_{\text{secondary}} \qquad \textbf{(3.1a)}$$

$$I_{\text{secondary}} = CT_{\text{turns Ratio}} * I_{\text{primary}} \qquad \textbf{(3.2b)}$$

3.6.2 Battery Power Measurement LM 35

The LM35 sensor is a device that has an integrated circuit to measure the temperature at high accuracy, producing a linear voltage suitable for centigrade temperatures, This sensor is characterized by the fact that the user does not need to put a large fixed output voltage to obtain the Centigrade scale, in addition to its accuracy by sensing the linear temperature as calibrated in Kelvin. It gives 10mv for each Celsius. Each type of battery has a specific temperature that increases with the charge stored in the battery, this system is used to regulate the work of batteries and ensure continuity for a lifetime as large as possible, it is similar to sensitive work of phone battery.

The LM35 sensor is used to determine the amount of energy stored in the batteries. The limit of charging and discharging is controlled by this sensor depending on the temperature of the battery used [14].

Features

- Calibrated Directly in Celsius (Centigrade)
- Linear + 10-mV/°C Scale Factor
- Rated for Full −55°C to 150°C Range
- Operates From 4 V to 30 V
- Less Than 60-µA Current Drain
- Low Self-Heating, 0.08°C in Still Air
- Low-Impedance Output, 0.1 Ω for 1-mA Load

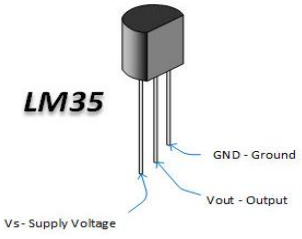

Figure 3.7 LM35 temperature sensor

CHAPTER 4

RESULT AND DISCUSSION

Introduction

The control circuit is designed and programmed with high accuracy and professionalism to provide power to supply the load at 24-hours a day, simulate all conditions affecting power sources, regulate the work of power sources and the load with high precision and professionalism, With the program the most accurate and the fastest response to any change in energy sources and the load and processed directly with the best solutions and options are available and with no waste of any energy and ensuring continuity in providing power to the load and specially the pumps that require continuity at work.

In addition to the work of this system to regulate the work of sources of energy and pregnancy, designed this system to act as a system of protection for batteries, which works to stop the charging and discharging of at the limit specified, Where the most important work for the battery system is to compensate for the shortage of energy generated from sources to supply the load and if all sources are off power generation the load is supplied by batteries and if the specified amount of energy from the batteries not enough, the diesel generator will be running to supply the load power and battery charging as this system is designed to make a generator Diesel continues to operate until enough energy is stored in the batteries to be sufficient to supply the load for a period of time. The system then stops the diesel generator from working, knowing this is a state of emergency, this system designed to avoid it.

As the goal of this control is to take advantage of all the capacity generated by hydraulic, solar and wind energy and not waste any energy generated and used to supply the load and the rest of the energy will store in the batteries to be used at the time of need it and the generator is considered to be an emergency if there is a bad circumstance for hydraulic turbine, solar or wind and The existing power of both with insufficient batteries it will be running and using the generator to cover the required.

4.1 Basic Format of the Program

The work of the system is clarified in this illustration, where all sources of energy used are illustrated with the batteries system, and how to connect the different sources with the control system. This is exactly will be the work of the system in reality. The basic format of the system, this is shown in Figure 4.1.

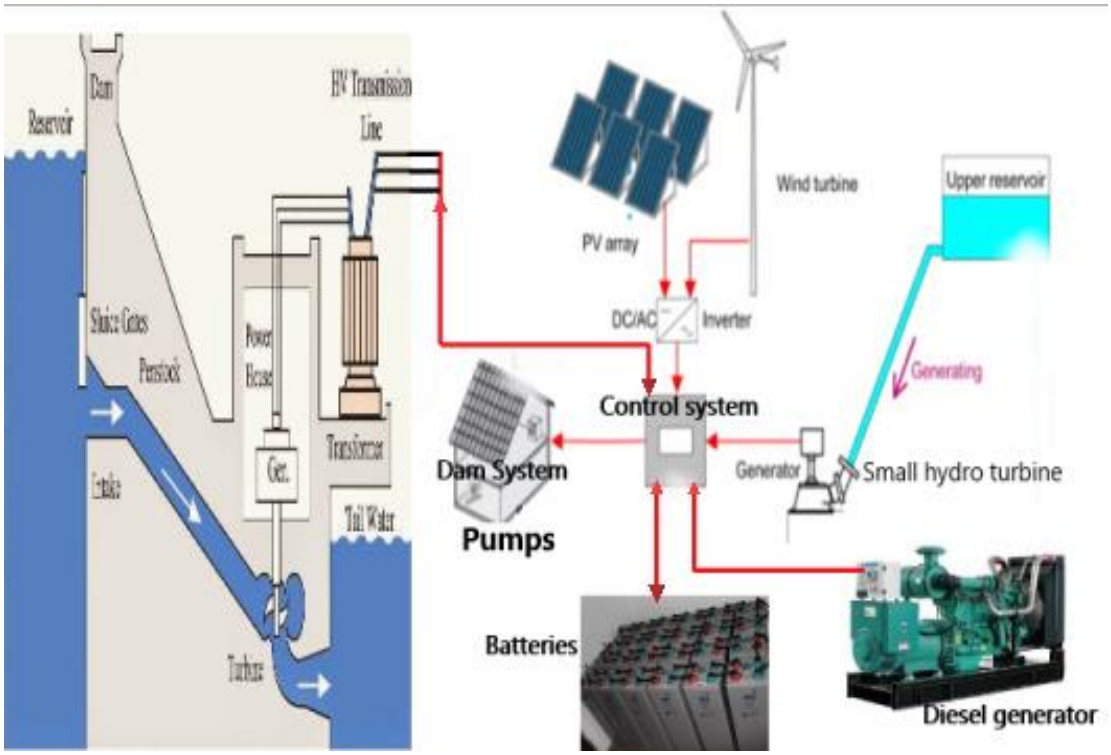

Figure 4.1 The basic format of the system.

4.2 In Case the Dam Stops Working

The red color of the dam light appears in the simulation stopping the dam of the working.

Note: In the normal work for the system, the pin on which the green light is connected is used to connect the relays continuously. The red light shines to indicate a lack of energy. But here in the simulation the green light is turned off and the red light is turned on to illustrate the system's work.

Note: The green light of the dam means that the energy generated from the system is added to the dam's electricity to supply the cities with electricity. The red light of the dam plug to means the connected of clean energy sources to supply the load

4.2.1 With Micro Hydraulic Turbine, Solar and Wind Turbine Connected.

There are many possibilities for the work of these sources.

4.2.1.1 With Excess Power from Both Hydraulic, Wind and Solar Energy (best case).

With energy generated from all sources and both of power generated from them is more than a load. This is shown in Figure 4.2.

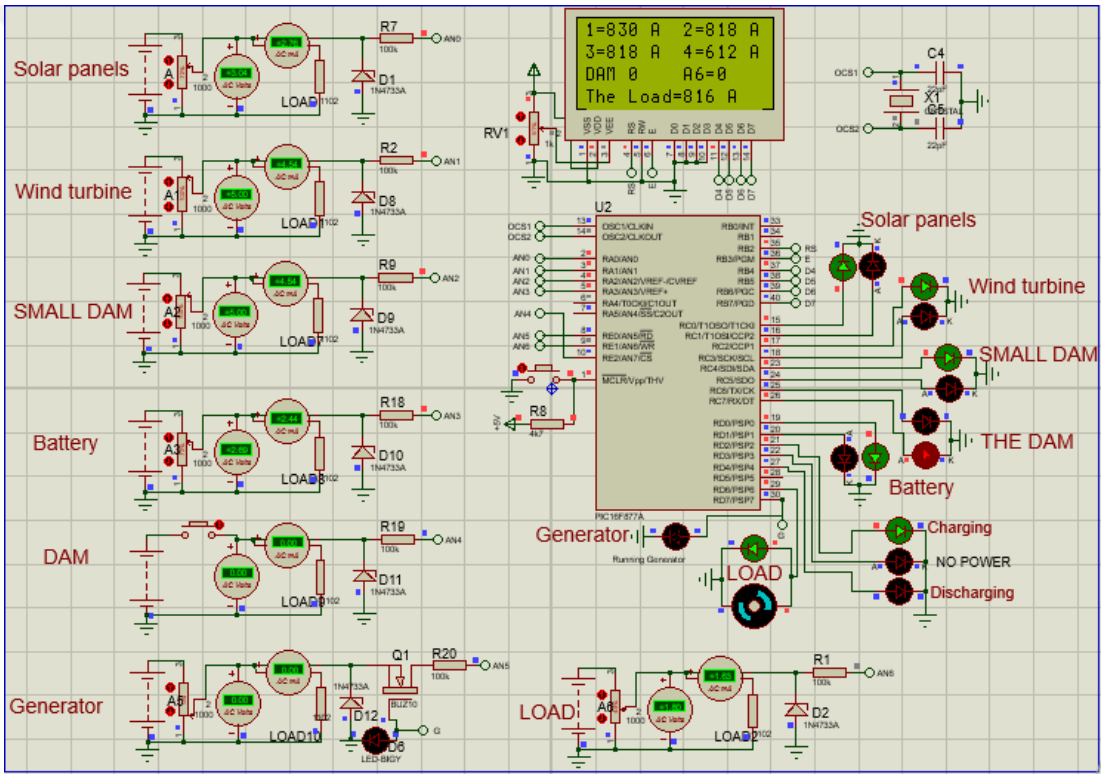

Figure 4.2 Best case

This is case considered the best of all other cases especially that energy is generated from every one of the sources (micro hydraulic turbine, solar energy, and wind energy) in the best conditions, As the amount of energy generated from every one of them is more than the amount of energy required to supply the load, where the load is supplied from one of the energies if only one of the pumps is working but if the load

is a pump and a control system for the gates or with both is used it will be used from more than one source and the remainder of this energy with the other sources to be stored in batteries (battery charging), to use it in time of need it (discharging), to use it to supply a load or contribute with other source to supply the load when need it, where all the lights for water, solar and wind are shines in green and the batteries charge too, signify that. Where calculations are made for the construction of clean stations making the most use of energy, depending on making this situation the basic condition and choosing the right place where the appropriate conditions are available for that.

4.2.1.2 With Excess Power (water, solar and wind)

With energy generated from all the sources, but each one generates less energy than load. This is shown in Figure 4.3.

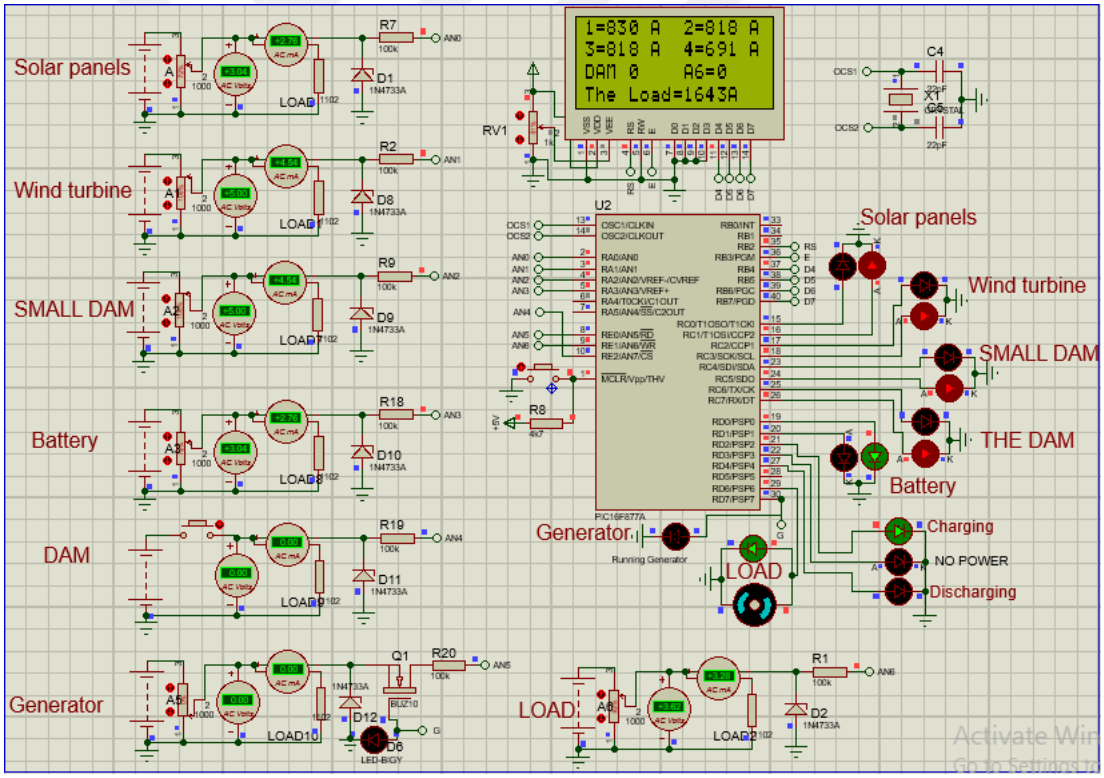

Figure 4.3 Excess energy from total of hydropower, wind and solar energy

With energy generated from solar panels, wind turbines, and micro hydraulic turbines, but each one generates less energy than load. Therefore, the load will be supplied from more than one source and the increase in the generated energy will be

stored in batteries (battery charging) to be used if the total energy generated is less than the energy required to supply the load, that the batteries will compensate the shortage of supply of load.

Where we see the lights of the solar panels, wind turbines and micro hydraulic turbines shines red and the battery shine green indicates on this. This is shown in *Figure 4.3.*

4.2.1.3 Without Excess Power (water, solar and wind)

With energy generated from all sources, but all power generated from them is less than load. This is shown in Figure 4.4.

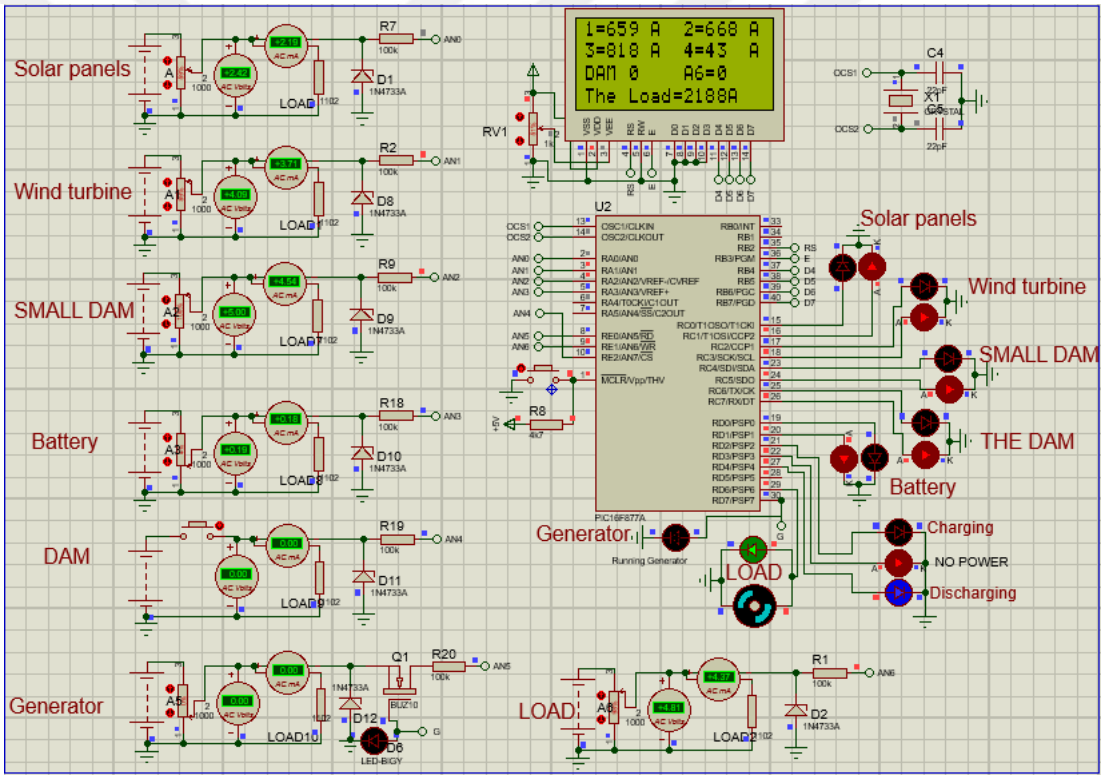

Figure 4.4 Without Excess energy from total of hydropower, wind and solar energy

With energy generated from all the sources (solar panels, wind turbines, and micro hydraulic turbines) but all of the energy generated less than load. Therefore, the load will be supplied from all the sources and the energy shortage will be compensated from the batteries (battery discharging), which have been stored in the batteries to

use in such this case, where we see the batteries discharging light shines blue indicates this.

Where we see the lights of the solar panels, wind turbines, and micro hydraulic turbines shines red and the battery shines blue, indicates on this.

4.2.1.4 With Excess Power from Small Hydraulic Turbines

With energy generated from all sources, but only the energy generated from micro hydraulic turbines is more than a load. This is shown in Figure 4.5.

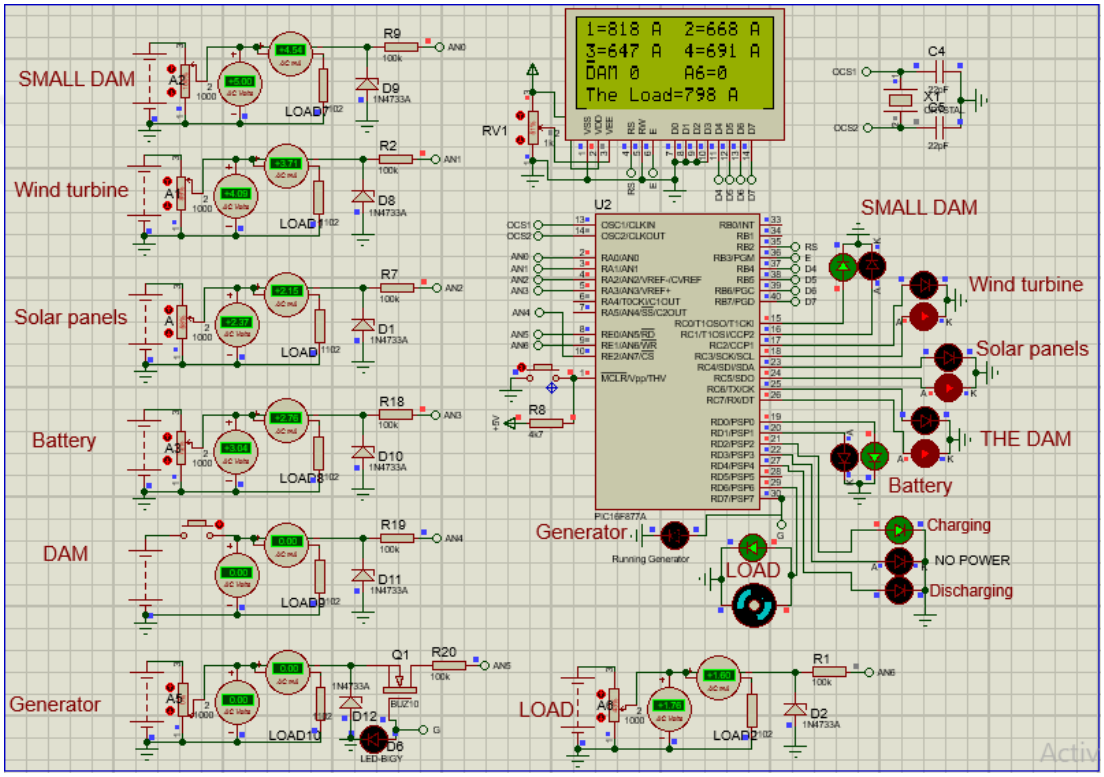

Figure 4.5 All sources are working excess power only from small hydraulic turbines

With energy generated from all the sources in the same time, but only micro hydraulic turbines are more than load, where the wind turbine and solar panels energy are present but each one is less than the load. Therefore the load will be supplied from the micro hydraulic turbines and the remainder of this energy is used with energy generated from the wind turbines and solar panels to charge the batteries that are used when needing it.

So we can see the micro hydraulic turbines, light shiny green, wind, and solar light shine red indicate on that, and the batteries, light shine green indicates that it is in the charging state.

4.2.1.5 With Excess Power from Wind Turbines

With energy generated from all sources, but only the energy generated from wind turbines is more than a load. This is shown in Figure 4.6.

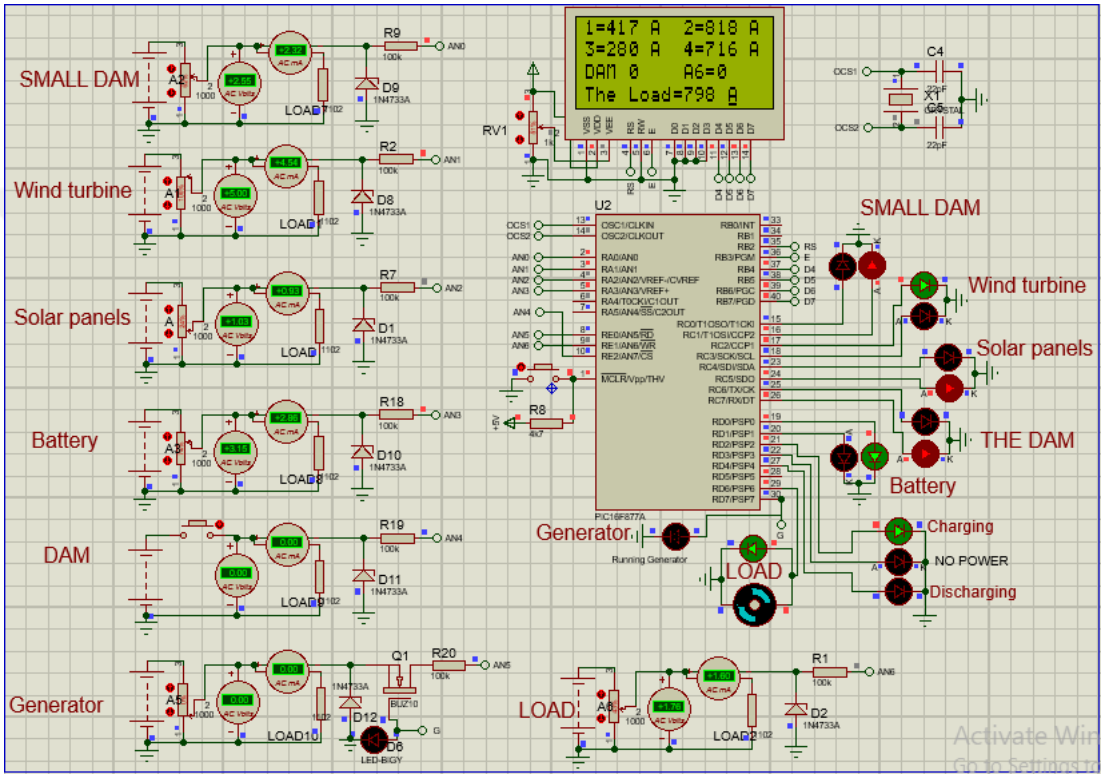

Figure 4.6 With excess power from wind turbines

With energy generated from all the sources in the same time, but only wind turbines are more than load, where the micro hydraulic turbine and solar panels energy are present but each one is less than the load. Therefore the load will be supplied from the wind turbines and the remainder of this energy is used with energy generated from the micro hydraulic turbines and solar panels to charge the batteries that are used when needing it.

So we can see the wind turbines, light shine green, hydraulic and solar light shine red indicators on that, and the batteries, light shine green indicates that it is in the charging state.

4.2.1.6 With Excess Power from Solar Panels

With energy generated from all sources, but only the energy generated from solar panels is more than a load. This is shown in Figure 4.7.

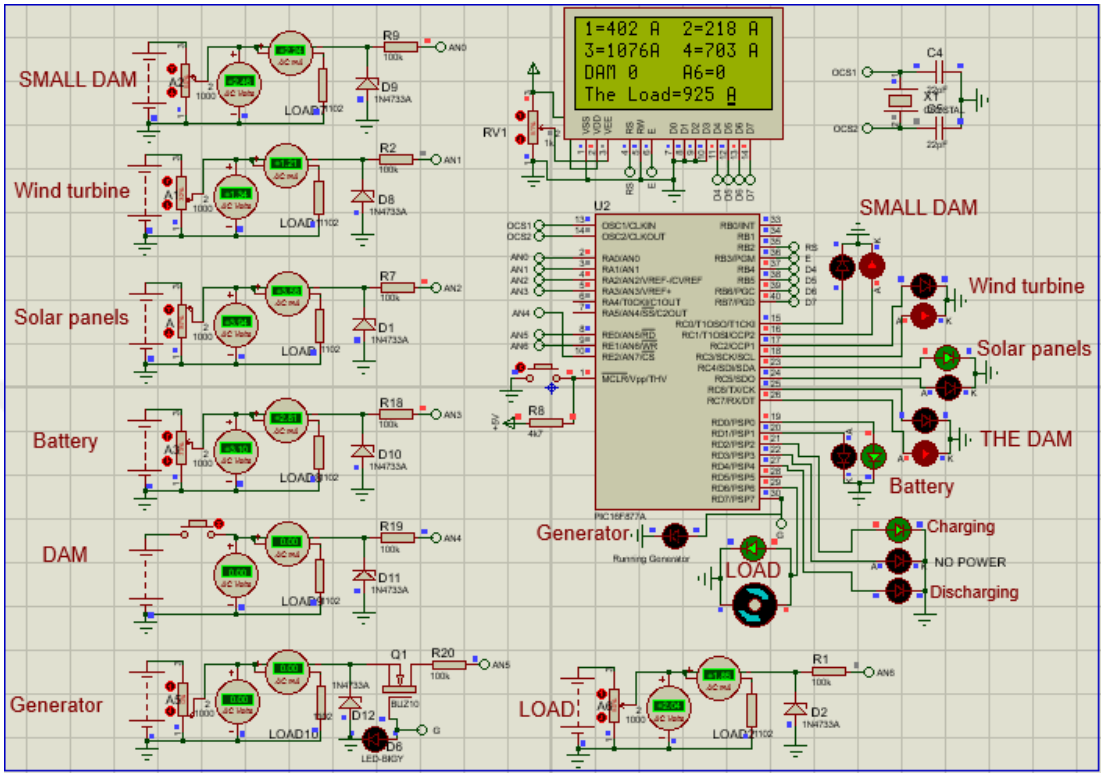

Figure 4.7 With excess power from solar panels

With energy generated from all the sources in the same time, but only solar panels are more than load, where the micro hydraulic turbine and wind turbine energy are present but each one is less than the load. Therefore the load will be supplied from the solar panels and the remainder of this energy is used with energy generated from the micro hydraulic turbines and wind turbine to charge the batteries that are used when needing it.

So we can see the solar panels, light shine green, hydraulic and wind light shine red indicators on that, and the batteries, light shine green indicates that it is in the charging state.

4.2.2 The Presence of Micro Hydraulic Turbines only.

In the case, there is an energy generation only from micro hydraulic turbines, As this possibility can occur at night as there is no sun with the possibility of a wind stop. There are several possibilities expected to depend on the amount of water flowing. Where this system deals with all these cases and circumstances and finds the ideal solution for it.

4.2.2.1 With Excess Power

With energy generated from micro hydraulic turbines only, where there is enough power to supply the load and there increase in energy is stored in batteries (battery charging). This is shown in Figure 4.8.

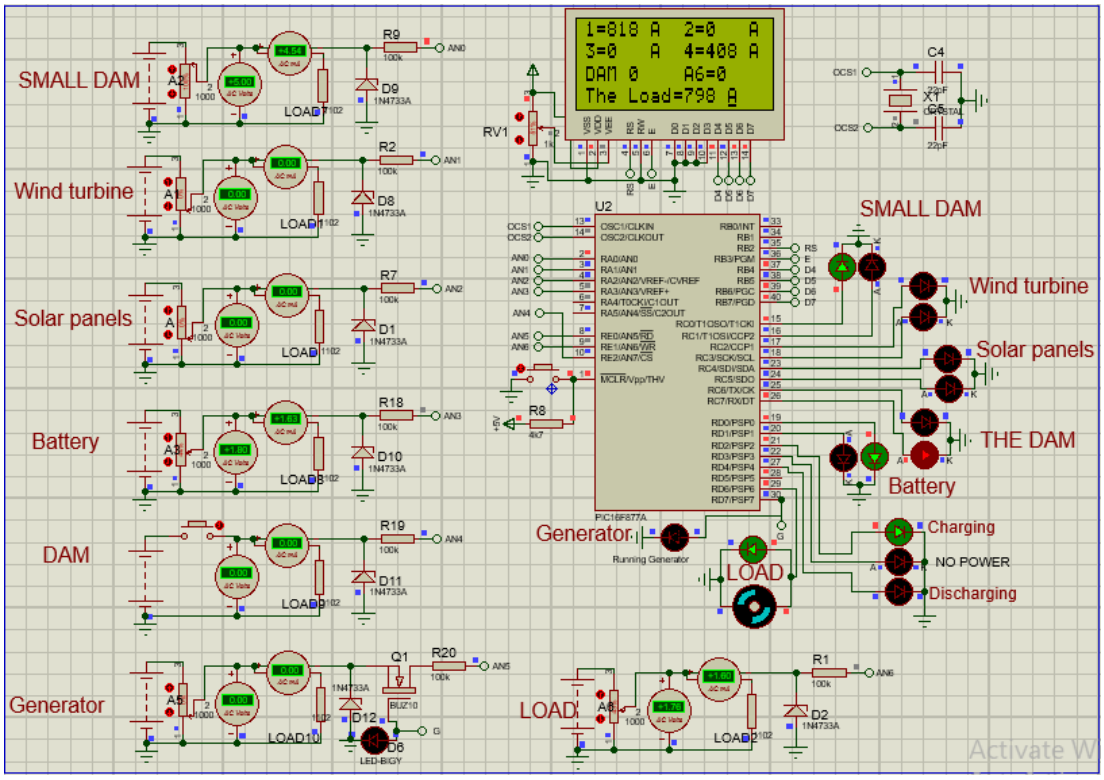

Figure 4.8 With excess power

With energy generated from micro hydraulic turbines, where there is energy more than load, so the load will be supplied from the micro hydraulic turbine energy and there is an increase in energy so it will be used for charging the batteries, that are used in the time when need to it. So we can see the micro hydraulic turbines, LED in

green color indicating that there is more energy than needed to supply the load, and batteries charging LED in green Indicates that the battery is charging.

4.2.2.2 With Enough Power

With energy generated from micro hydraulic turbines only, where there is enough power to supply the load, but there is no increase in energy to store in the batteries (battery charging). This is shown in Figure 4.9.

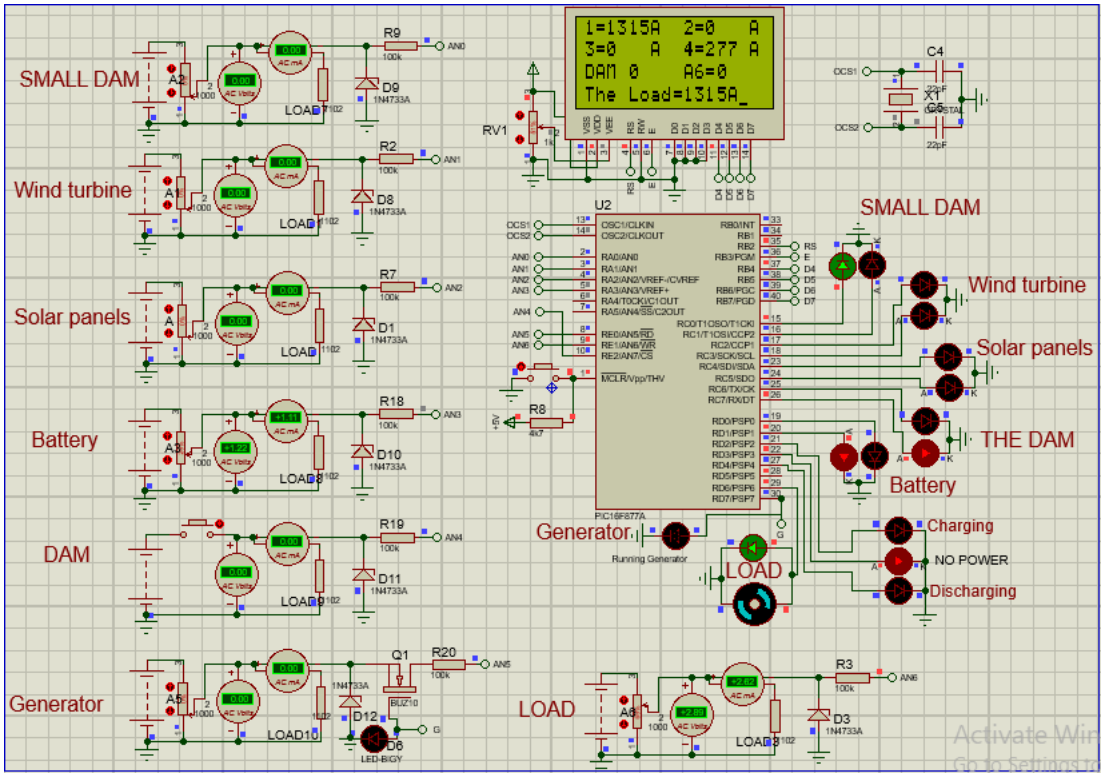

Figure 4.9 With enough power

With energy generated from micro hydraulic turbines, where there is enough energy to supply the load, so the load will be supplied from it, but there is no increase in energy to charging the batteries. So we can see the micro hydraulic turbines, LED in green color the batteries LED in red color indicating that there is only enough energy to supply the load, without excess energy.

4.2.2.3 With Insufficient Energy Generated

With energy generated from micro hydraulic turbines only, but not enough power to supply the load. This is shown in Figure 4.10.

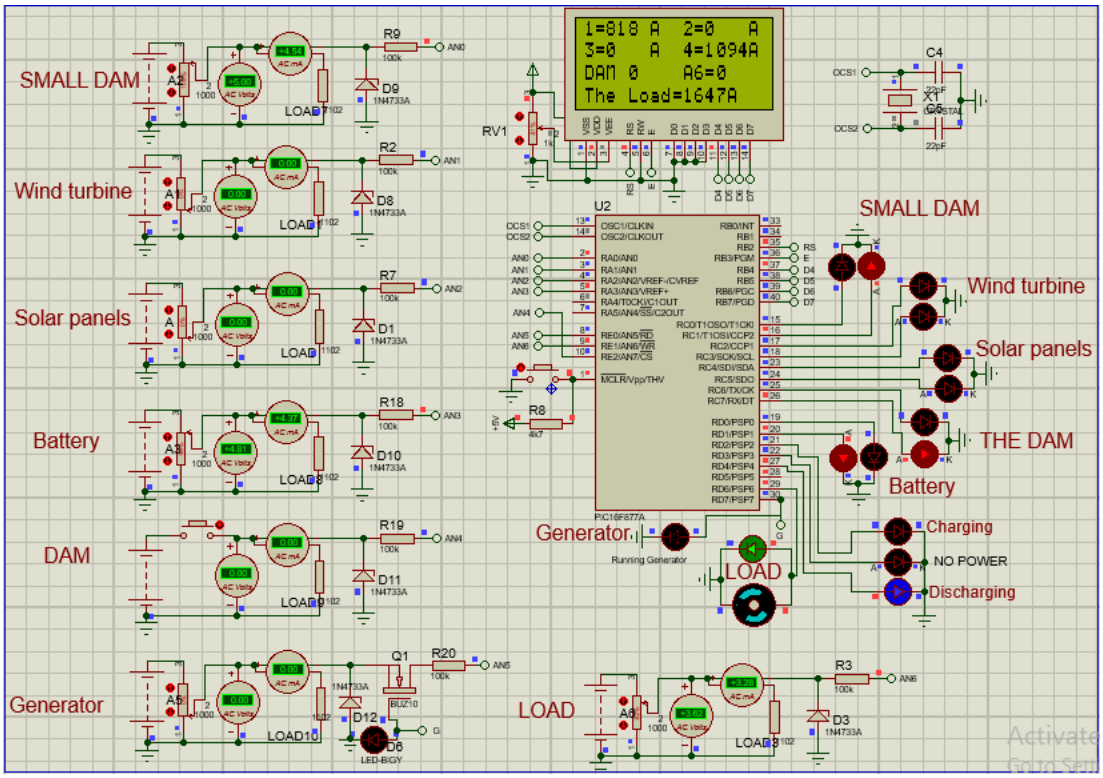

Figure 4.10 With insufficient energy generated

With energy generated from micro hydraulic turbines only, but there is not enough energy to supply the load, so the load will be supplied from the micro hydraulic turbine energy and the energy shortage is compensated by the energy previously stored in the batteries, where we can see the micro hydraulic turbines, LED in red color and the batteries LED in blue color (discharging) indicating that there is discharging to compensate for the shortfall to supply the load.

4.2.3 The Presence of Wind Energy only.

In the case there is energy generation only from wind turbines, there are several possibilities expected to depend on the weather condition affecting the work of the wind turbine to generate electricity from them (wind speed).

4.2.3.1 With Excess Power

With energy generated from wind turbine only, where there is enough power to supply the load and there is an increase in energy. This is shown in Figure 4.11.

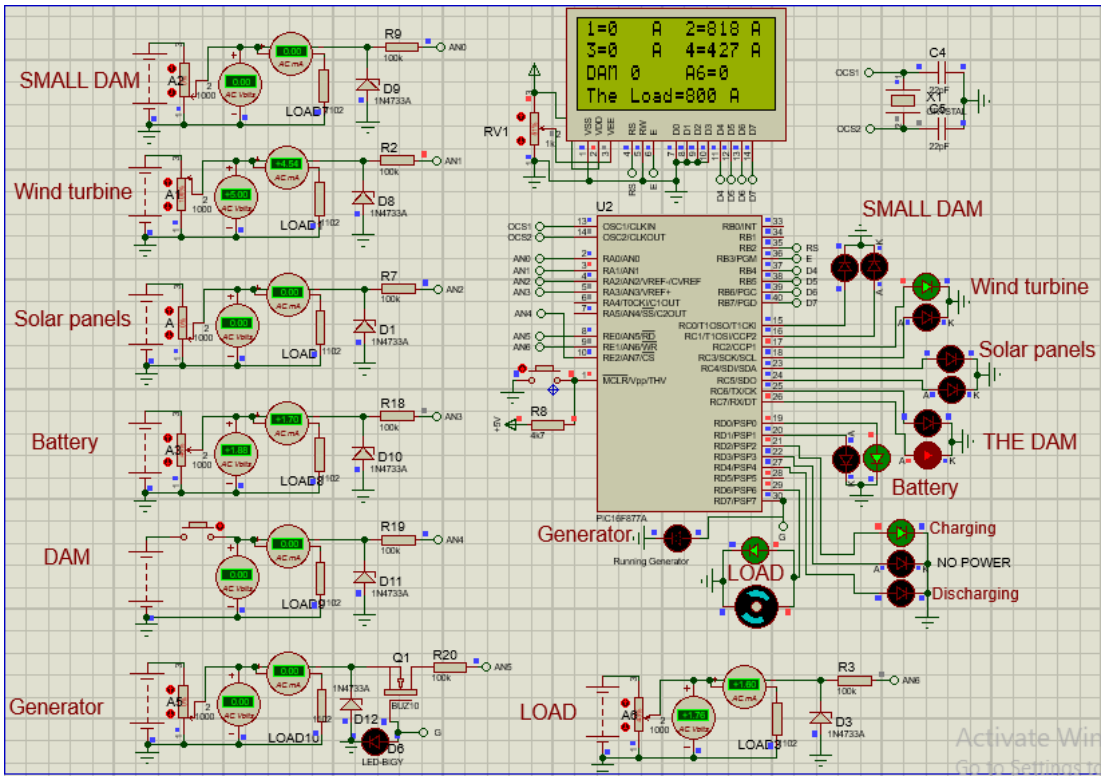

Figure 4.11 With excess power

With energy generated from wind turbines, where there is energy more than load, so the load will be supplied from the wind turbine energy and there is an increase in energy so it will be stored in the batteries (charging batteries), that are used in the time when the need for it. Therefore, we can see the wind turbine LED in green color and batteries charging LED in green indicating that there is more energy than needed to supply the load and the Batteries in case of charging.

4.2.3.2 With Enough Power

With energy generated from wind turbine only, where there is enough power to supply the load, but there is no increase in energy. This is shown in Figure 4.12.

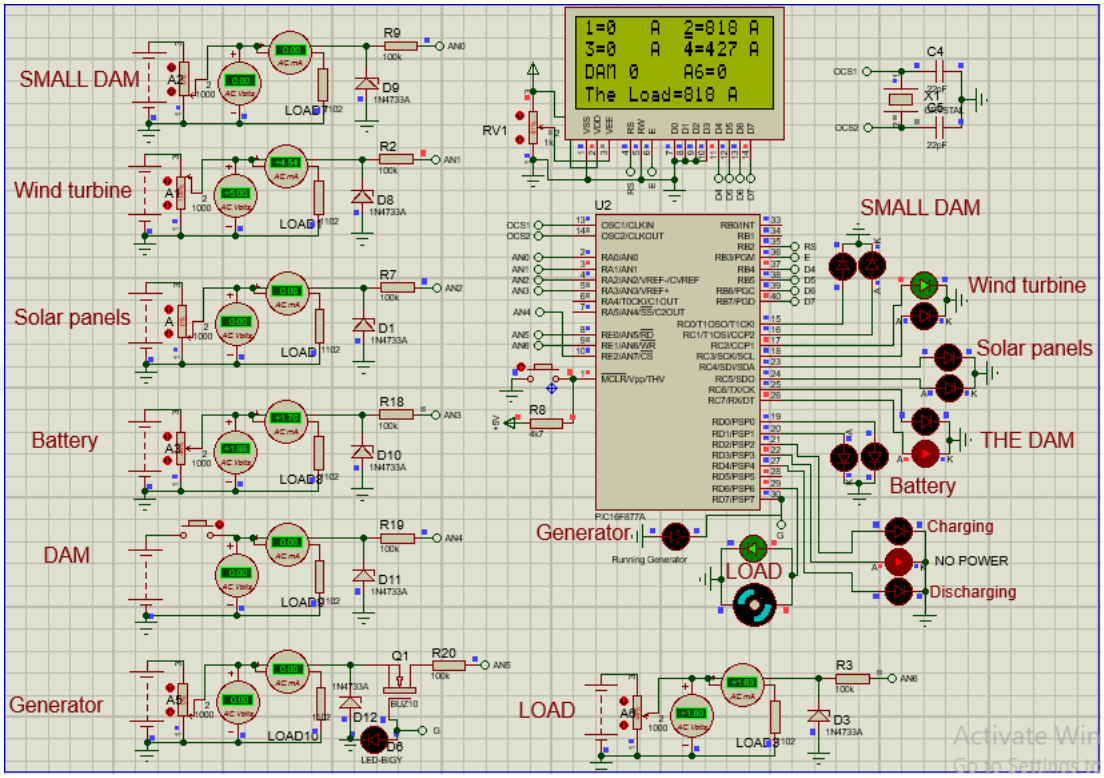

Figure 4.12 With enough power

With energy generated from wind turbines, where there is enough energy to supply the load, so the load will be supplied from the wind turbine but there is no increase in energy to charging the batteries. Therefore, we can see the wind turbine LED in green color and the batteries LED, without light indicating that there is enough energy to supply the load without excess energy.

4.2.3.3 With No Enough Power

With energy generated from wind turbine only, but not enough power to supply the load. This is shown in Figure 4.13.

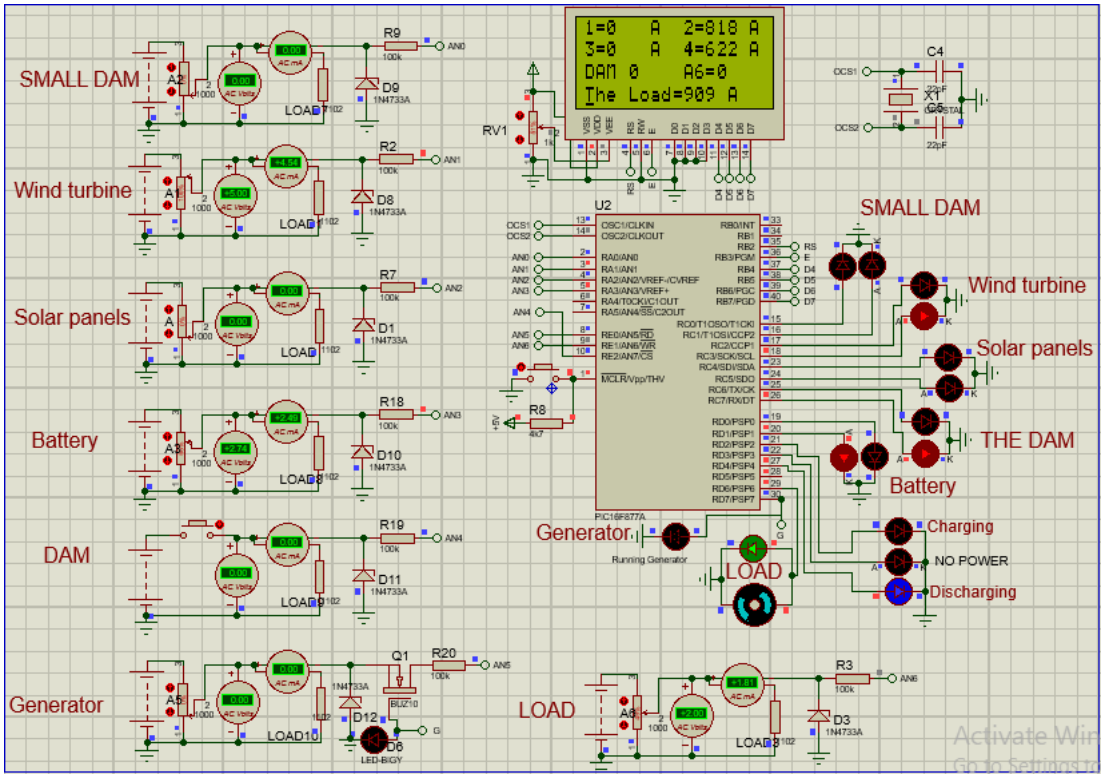

Figure 4.13 With no enough power

With energy generated from wind turbine only, but there is not enough energy to supply the load, so the load will be supplied from the wind turbine energy and the energy shortage is compensated for the energy that is pre-stored in the batteries. Therefore, we can see the wind turbine LED in red color and the batteries LED in blue color (discharging) indicating that there is discharging to compensate for the shortfall to supply the load.

4.2.4 The Presence of Solar Energy only.

In the case there is energy generation only from solar panels, there are several possibilities expected to depend on the weather condition. This system was programmed and designed to deal with all this situation and possibilities and to find the ideal solutions for the operation of the system and to benefit from the maximum possible energy generated and don't lose any energy.

4.2.4.1 With Excess Power

With energy generated from solar panels only, where there is enough power to supply the load. This is shown in Figure 4.14.

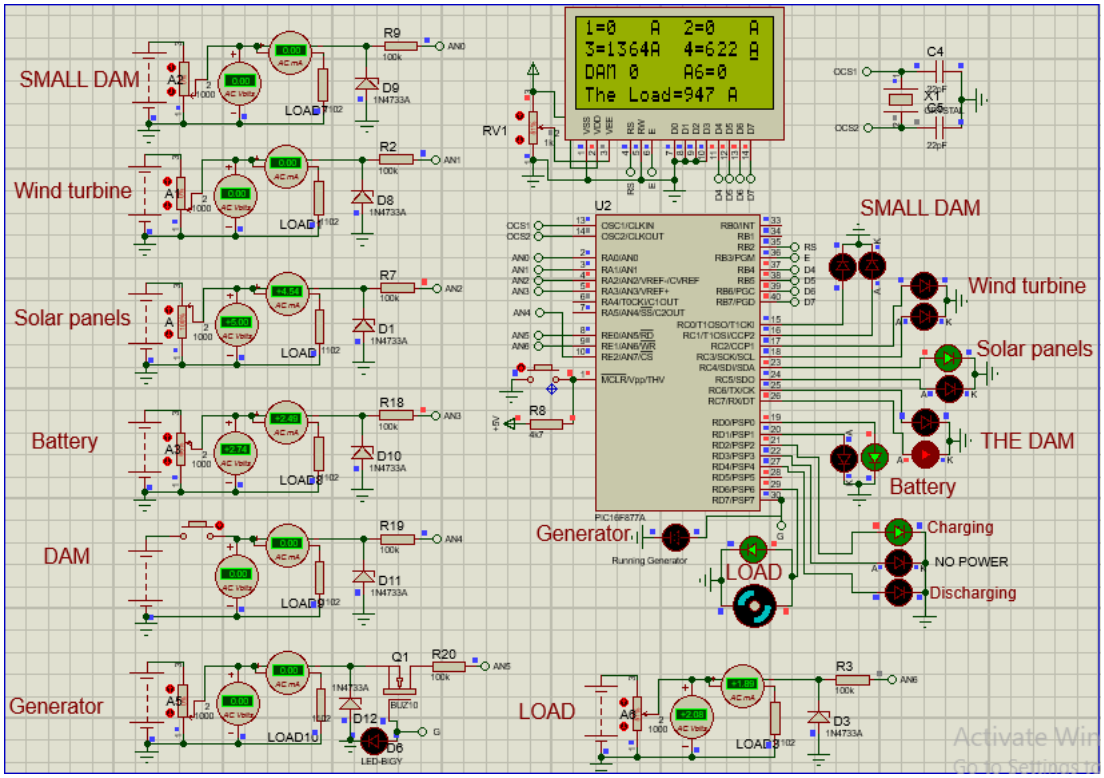

Figure 4.14 With excess power

With energy generated from solar panels, where there is energy more than load, so the load will be supplied from the solar panels, energy and there is an increase in energy so it will be stored in the batteries (charging batteries), that are used it when the need for it. Therefore, we can see the solar LED in green color and batteries charging LED also in green indicating that there is more energy than needed to supply the load and the Batteries in case of charging.

4.2.4.2 With Enough Power

With energy generated from solar panels only, where there is enough power to supply the load. This is shown in Figure 4.15.

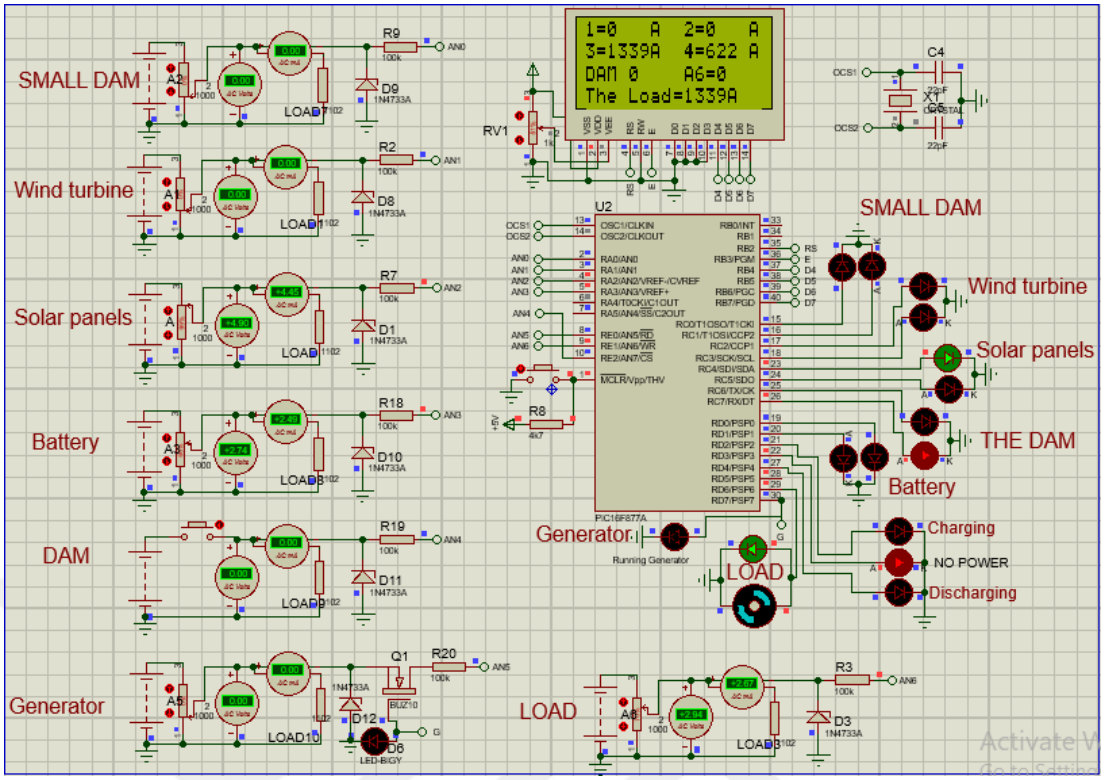

Figure 4.15 With enough power

With energy generated from solar panels, where there is enough energy to supply the load, so the load will be supplied from the solar panels, energy but there is no increase in energy to charging the batteries. Therefore, we can see the solar LED in green color and the batteries LED, without light (no power LED in red color) indicating that there is enough energy to supply the load, without excess energy.

4.2.4.3 With No Enough Power

With energy generated from solar panels only, but not enough power to supply the load. This is shown in Figure 4.16.

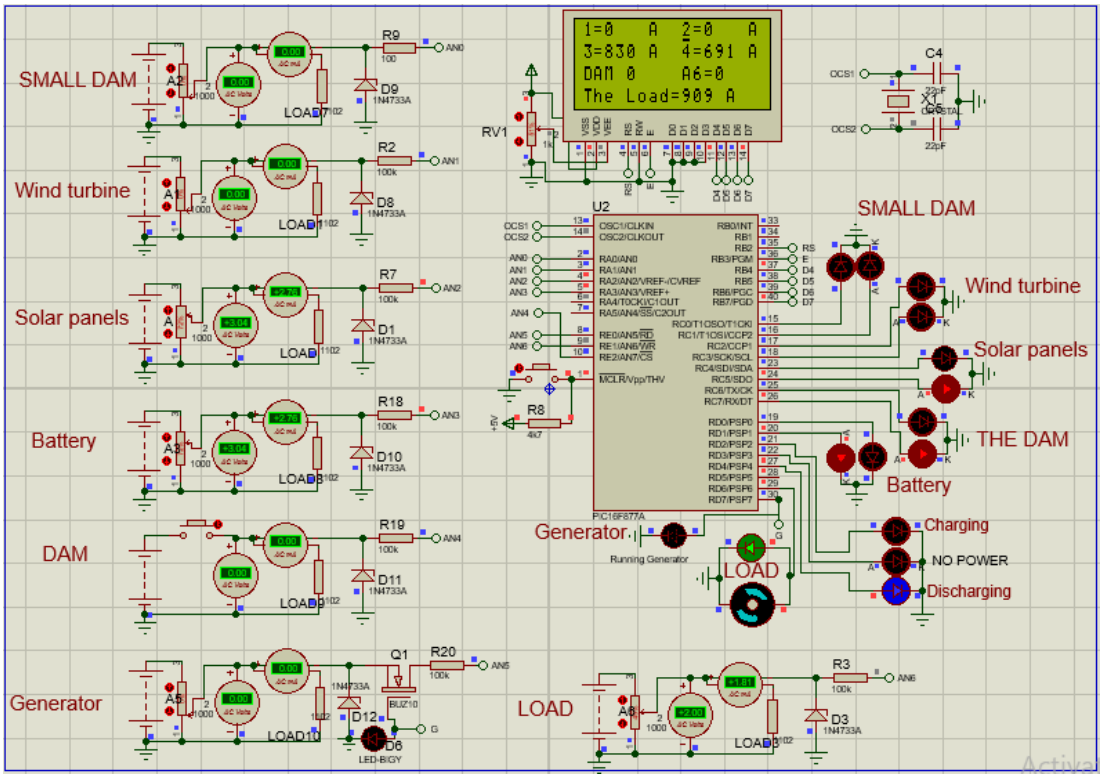

Figure 4.16 With no enough power

With energy generated from solar panels only, but there is not enough energy to supply the load, so the load will be supplied from the solar panels, energy, and the energy shortage is compensated for the energy that is pre-stored in the batteries. Therefore, we can see the solar LED in red color and the batteries LED in blue color (discharging) indicating that there is discharging to compensate for the shortfall to supply the load.

4.2.5 Supply Load of the Batteries

In this case, with no energy generated from all the sources to supply the load, there is energy already stored in the batteries which are more than the amount of energy required so the batteries are supplied for a period of time. Therefore, we can see the batteries LED in green color indicating that there is enough energy in the batteries and discharging LED indicating that the batteries supply the load. This is shown in Figure 4.17.

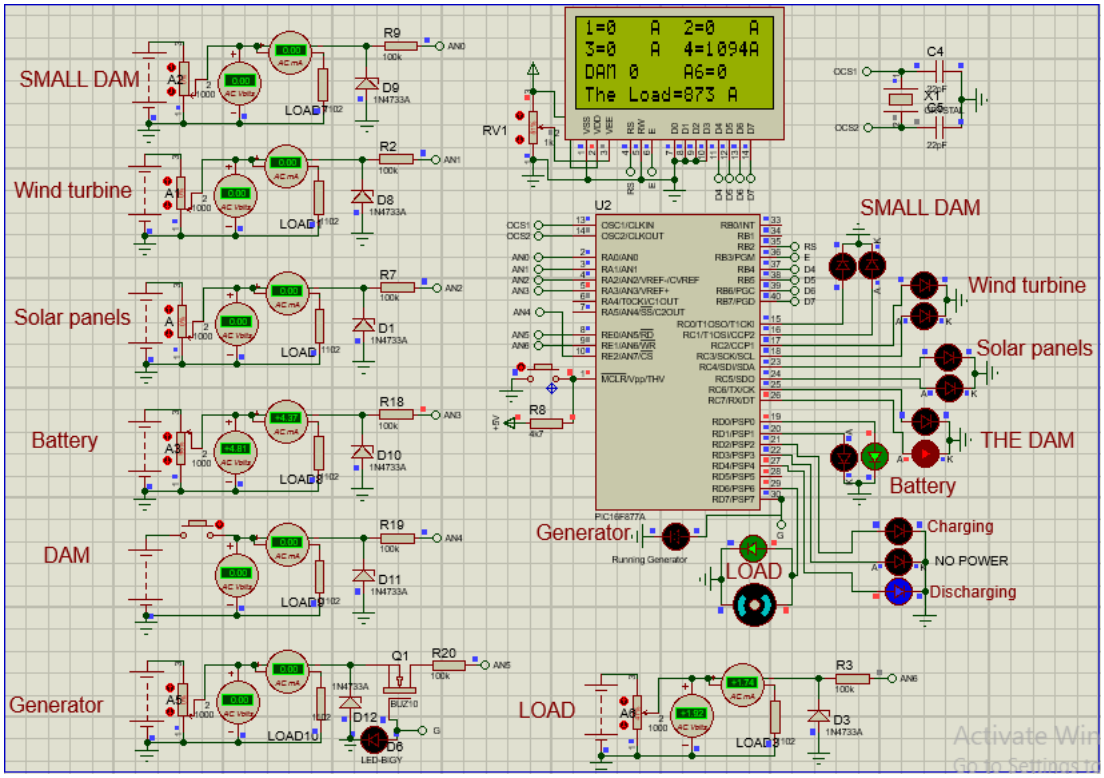

Figure 4.17 Supply load of the batteries

4.2.6 With Insufficient Energy from all of Hydraulic, Solar and Wind Energy as well as Batteries (Case of Emergency)

IN this case With no energy generated from all the sources or there is energy generated, but not enough to supply the load, so the microcontroller will send a signal to diesel generator for running it and supply the load and the excess energy will use to store in the batteries (charging batteries) to use it in the time when need to it.

This situation may occur because of the bad atmosphere that may occur, which adversely affect the amount of energy generated from sources of all source energies and may lead to the depletion of energy stored in batteries and renewable sources of energy may cease to generate power. This system is designed to deal with all these possibilities and find the most ideal Solutions The microcontroller will send a signal to operate the diesel generator and supply the load with the required power and store the remaining energy in the batteries to be used at the time of the automatic need, but we considered this case is emergency case, where the calculations are done accordingly to avoid the operational losses and make the system running at its

operating cost is considered zero, because the cost of fuel required to operate the generator is expensive, as well as the generator's need for maintenance and the working hand. The calculations are made to provide the load with low losses, in addition to providing a 100% pure environment, where there are no gas emissions that negatively affect the environment.

4.2.6.1 No Enough Energy from all Sources

With energy generated from all the sources (hydraulic, solar and wind energy) but it is not enough energy to supply the load with the required power and also there is no energy stored in the batteries enough to compensate for the shortage of energy to provide the load with the required energy. This is shown in Figure 4.18.

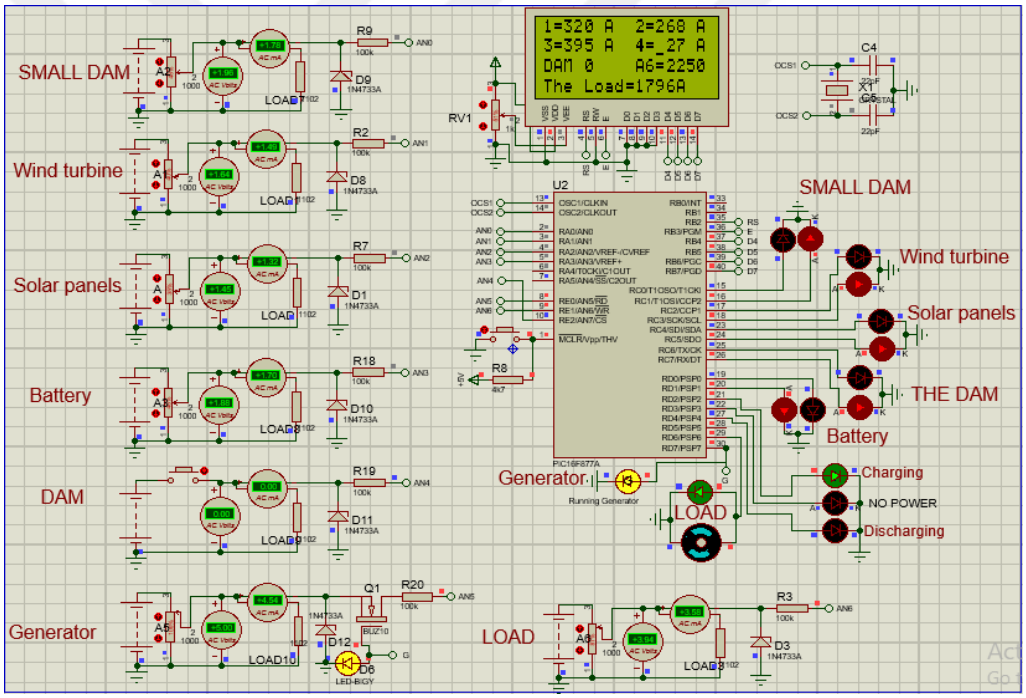

Figure 4.18 No enough energy from all sources

With energy generated of all sources as well as batteries, but there is not enough energy to supply the load, so the microcontroller will send a signal to diesel generator for running it and supply the load and the excess energy will use to store in the batteries (charging batteries) to use it at the time when need it. Therefore, we can see all sources, LED shown in red and the running generator LED shown in yellow color indicating the microcontroller continuing to send the signal to the generator to

continue working with power generation from all sources, but insufficient and the batteries LED shown in green color (charging) indicating that the generator is running.

Other cases where the diesel generator works are shown in the following forms.

4.2.6.2 With No Enough Power from Hydraulic

The second case is the work of micro hydraulic turbines only. This situation is likely to occur at night as there is no sunlight With the possibility of wind stops, so only micro hydraulic turbines remaining work, in which case the generated energy with the energy stored in the battery may be insufficient to supply the load so the controller sends a signal to the diesel generator to supply the load with power and battery charge. This is shown in Figure 4.19.

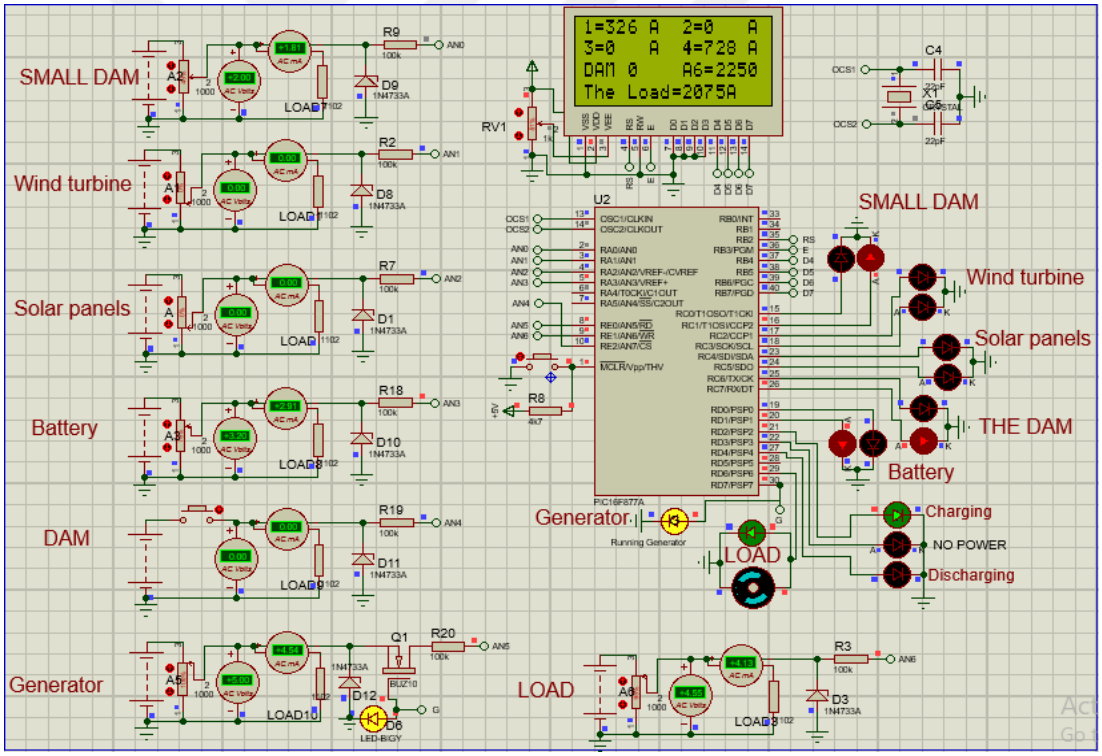

Figure 4.19 With no enough power from hydraulic

4.2.6.3 With No Enough Power from Wind Turbine

The third case is the work of wind turbines only. This situation is likely to occur at night as there is no sunlight With the possibility of water stops or because of an

electrical fault as the hydraulic turbines continue to operate without generating electricity, so only wind turbines remaining work, in which case the generated energy with the energy stored in the battery may be insufficient to supply the load so the controller sends a signal to the diesel generator to supply the load with power and battery charge. This is shown in Figure 4.20.

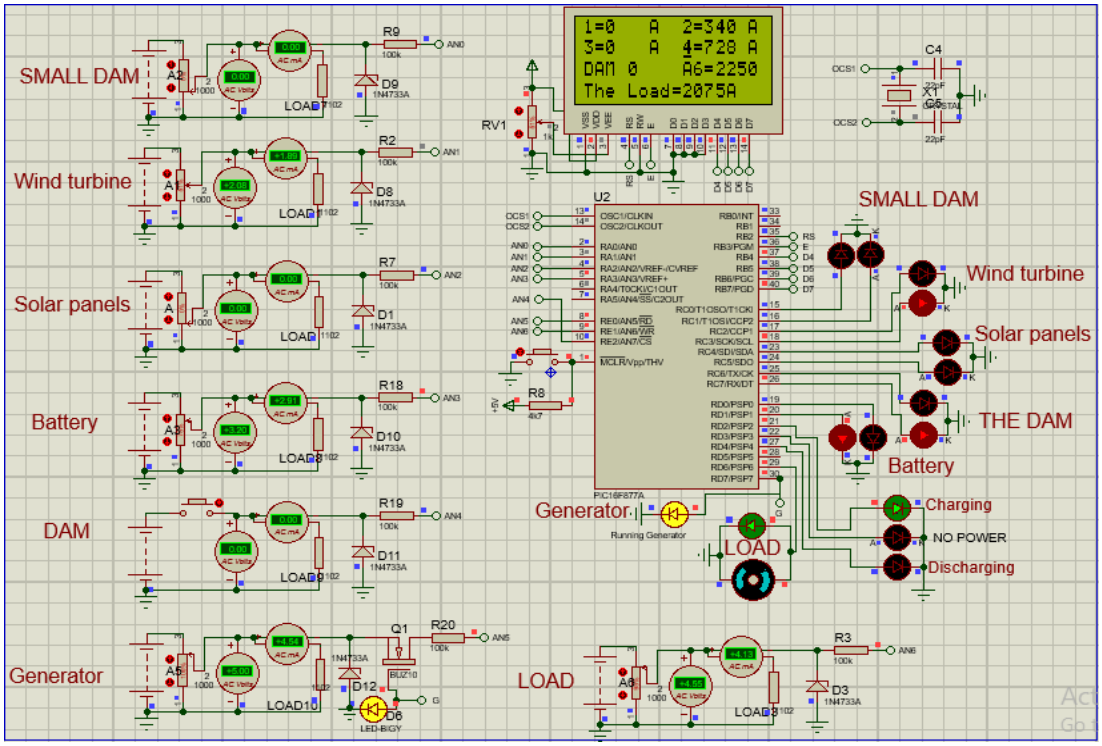

Figure 4.20 With no enough power from wind turbine

4.2.6.4 With No Enough Power from Solar Panels

The fourth case is the work of solar panels only. This situation is likely to occur in the daytime as there is sunlight with the possibility of wind stops and the possibility of water stops or because of an electrical fault as the hydraulic turbines continue to operate without generating electricity, so only solar energy remaining in which case the generated energy with the energy stored in the battery may be insufficient to supply the load so the controller sends a signal to the diesel generator to supply the load with power and battery charge. This is shown in Figure 4.21.

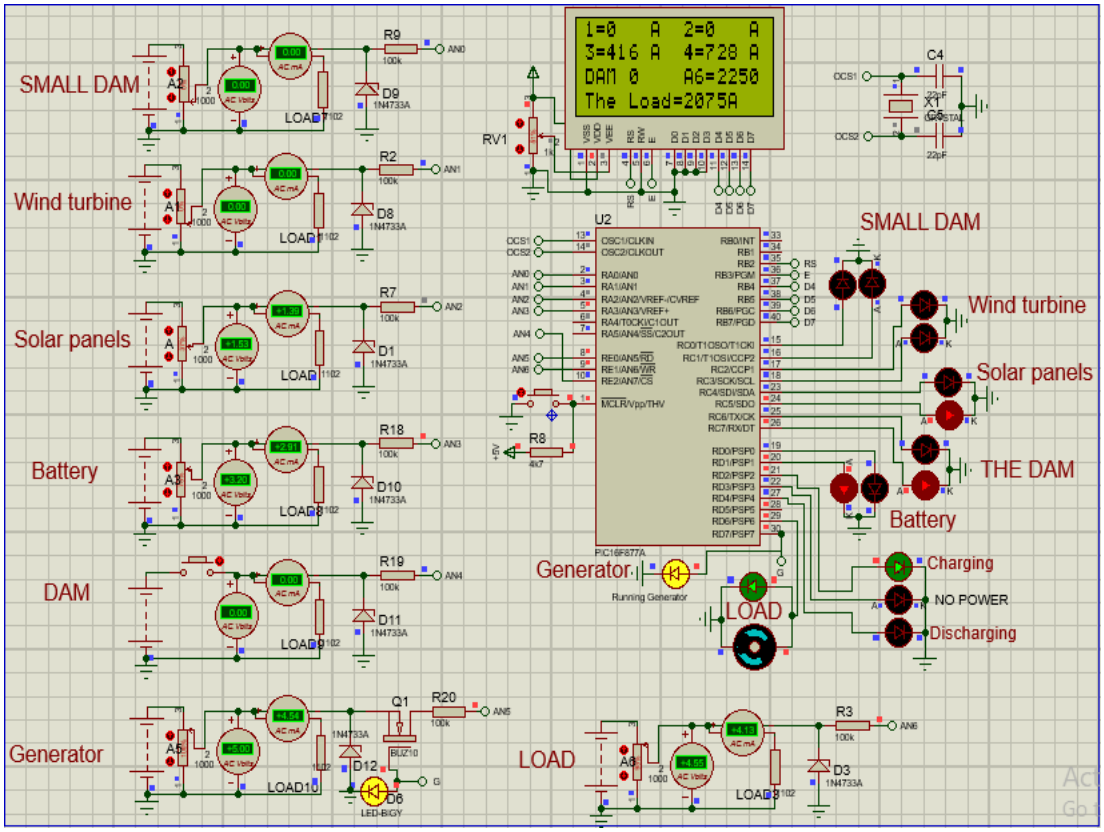

Figure 4.21 With no enough power from solar panels

4.2.6.5 With No Enough Power from all Sources as well as Batteries

The fifth case is that all sources of energy are parked as well as the batteries or there may be a charge stored in them but not enough to supply the load with the energy generated and this is the worst case among bad cases. This situation is expected to occur at night where there is no sunlight and the wind may stop as well as the water may be flowing to the small hydraulic turbines as the power generation may be stopped from the main turbines in the dam as it continues to work due to a fault in electricity, which causes the interruption of electricity generation And may last for several hours. This is shown in Figure 4.22.

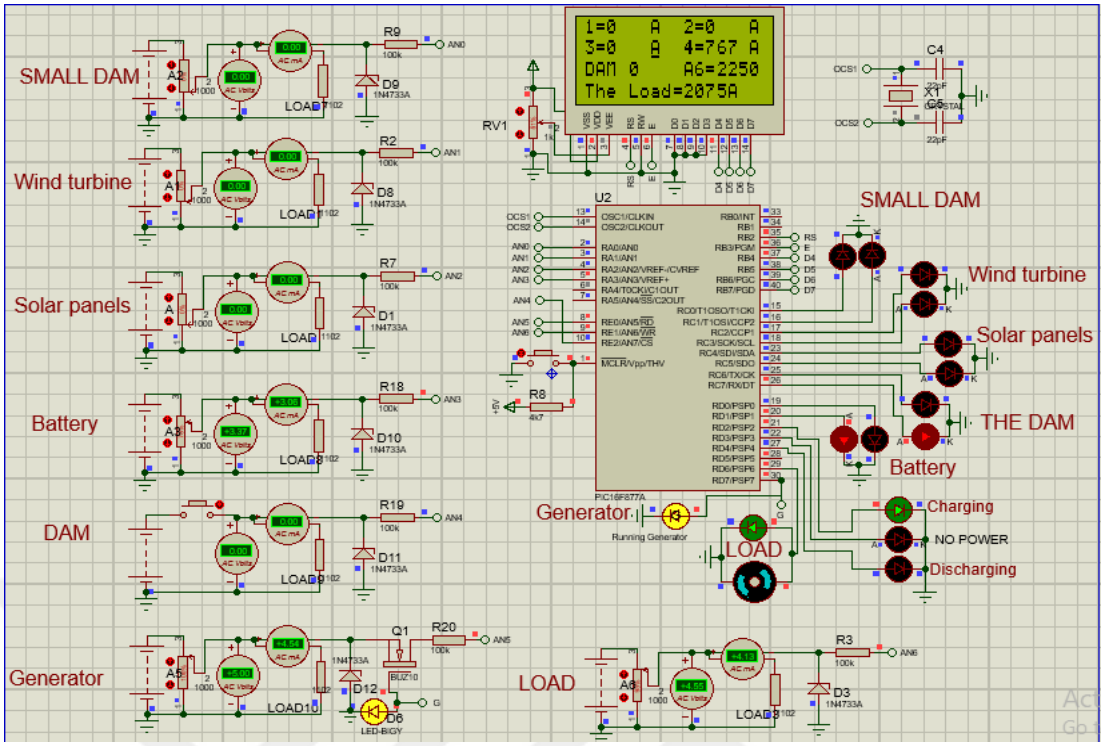

Figure 4.22 With no enough power from all sources as well as batteries

4.3 In Case the Dam is Working

In the case that the main hydraulic turbines in the dam works to generate electricity so it is more stable than the clean energy system to supply water pumps, in this case there is no need for this system to supply water pumps, the system that is designed to works in this case to take advantage of this energy and not waste any energy, This system will be used the energy that is generated from the clean energy system to charging the batteries and the rest of the energy is added to the electricity generated from the main dam turbines to supply the cities with electric power. This is the benefit from using the solar and wind energy because it continues to work and continues to benefit from all the energy generated from it Where the small hydraulic turbines stop working at the water gates close to them are closed

The green color of the dam light appears in the simulation the dam is working. This is shown in Figure 4.23.

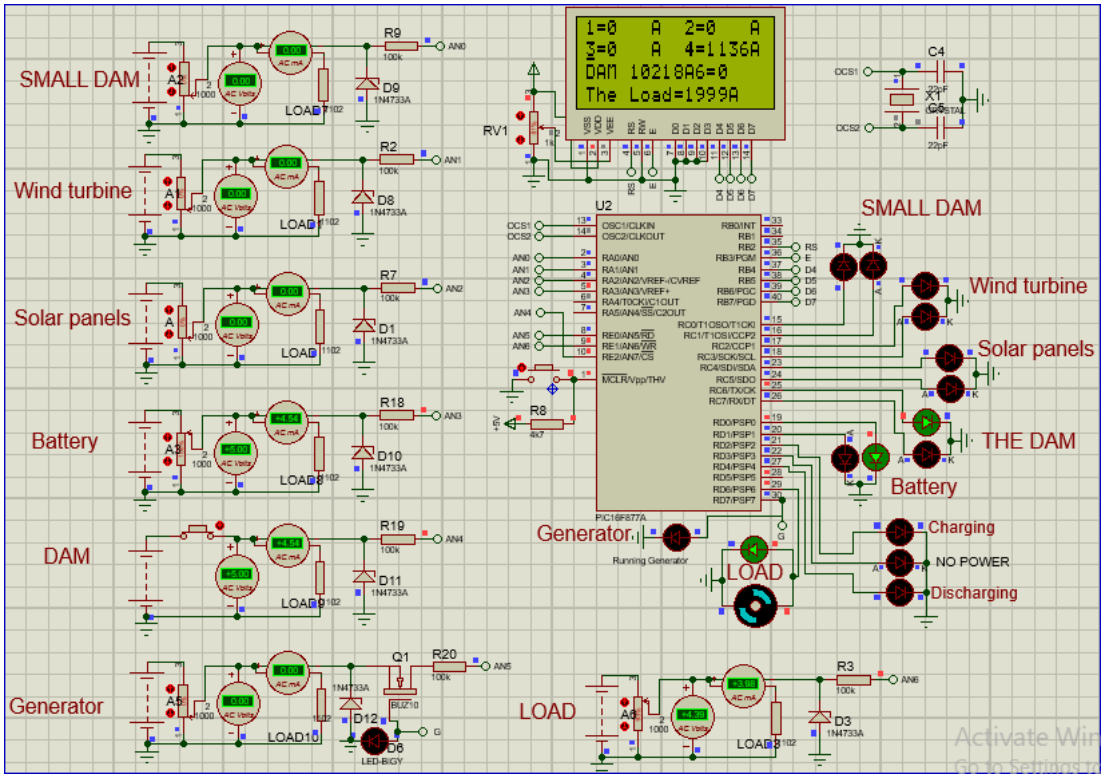

Figure 4.23 In case the dam is working

With the continuation of the work of the basic hydraulic turbines for the dam, this system makes it the source of the supply of pumps. And the clean energy system works three possibilities.

- The first is the generation of energy from both solar and wind, and this situation occurs in the day as the sun is bright and there is wind. This is shown in Figure 4.24.
- The second possibility is that the wind turbines stop working and the work of solar panels continues and this happens during the sun's brightness and the wind stops. This is shown in Figure 4.25.
- The third possibility is the work of the wind turbines and the solar panels stop working and this happens at night as there is no sunlight. This is shown in Figure 4.26.

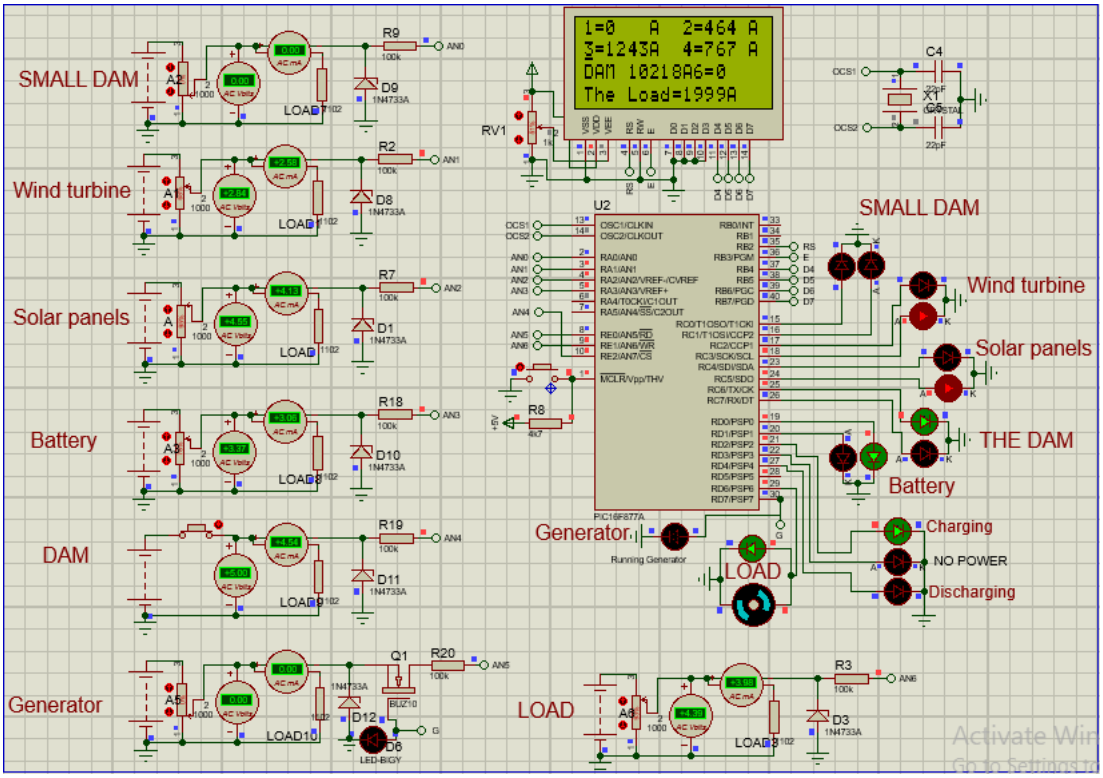

Figure 4.24 In case the dam is working with solar and wind

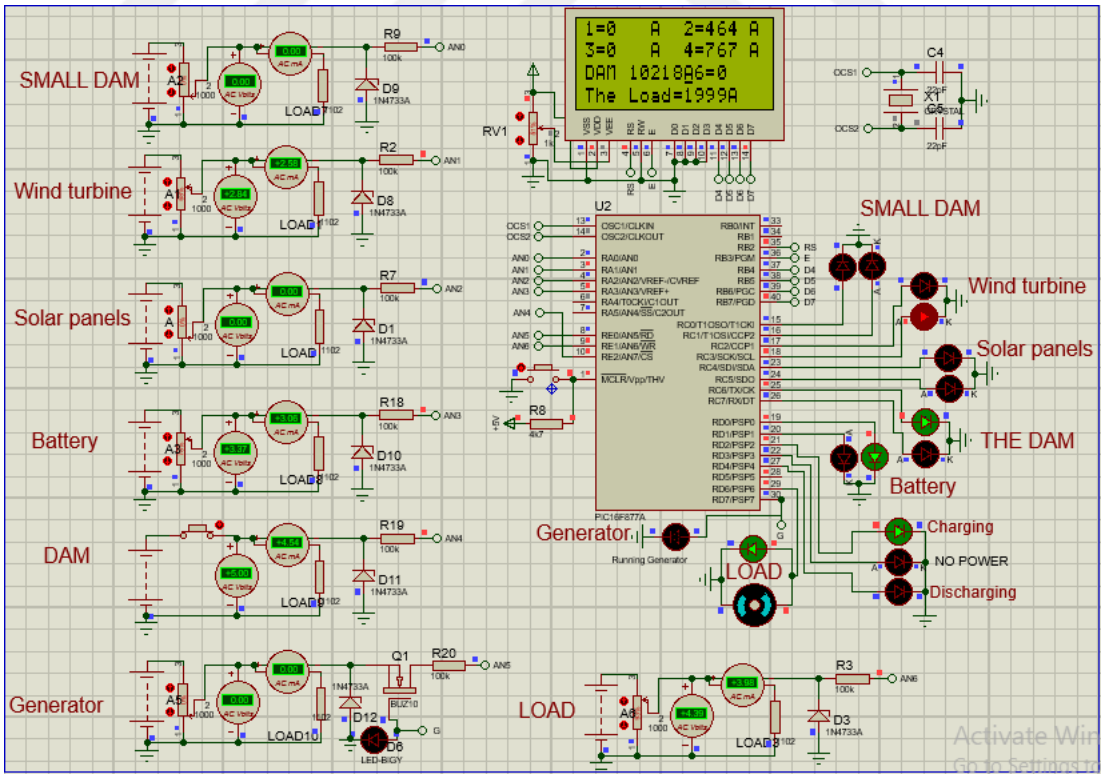

Figure 4.25 In case the dam is working with wind only

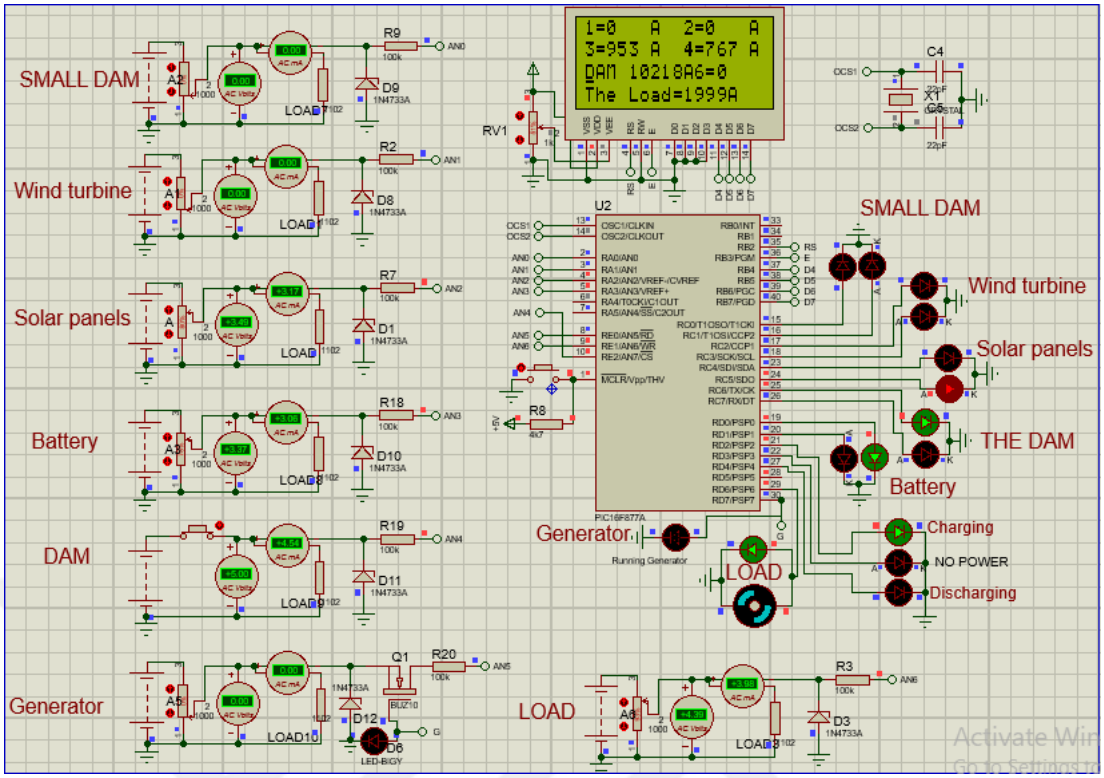

Figure 4.26 In case the dam is working with solar only

CHAPTER 5

MODELS AND METHODOLOGY

The application of the clean energy system has become an important alternative as an alternative power supply to traditional systems, where used hydraulic, wind and solar energy because they have high production advantages that qualify them to replace traditional sources in solving the problem of generating electricity to supply the pumps in case the dam stops production of energy, in order to explain the benefits of the system of clean energies with the amount of energy produced, We represented the results using Homer programming, where HOMER is a program developed for economic analysis of renewable energy systems.

After introducing the hydro/solar/wind resources energy with the cost of the equipment, HOMER performs calculations by accurate algorithms to give you the "optimal system type" (hydro, wind, PV, or hydro/PV / Wind Hybrid) depending on the economy side. The program needs to enter the location or enter the longitude and latitude, and it calls the readings energy of solar and wind energy, where it is one of the program features. [19]

LOCATION PROPERTIES AND COMPONENTS BEING USED

HADITHA Dam is a water dam for electricity generation located west of Anbar province in Iraq, 7 km away from HADITHA city, where the system will be established on it.

5.1 Hydro Turbine

The tubular turbine requires less space than other turbines, a saving in civil costs is realized due to a smaller powerhouse and shallow requirements for the draft tube, which is equipped with adjustable wicket gates and adjustable runner blades. This arrangement provides the greatest possible flexibility in adapting to changing net head and changing demands for power output; because the gates and blades can he adjusted to their optimum openings.

The tubular turbines are the best selection for hydraulic power with extremely low heads and extremely large flow rates. They have large discharge and high efficiency, and need less excavation.

5.1.1 Installation Method and Work

The water flows from the dam mediated by a 11 meter drop tube, the discharge rate is not constant but lowest rate is 250 cubic meters per second. Therefore, the water speed is about 946.37 meters per hour, it is the least speed.

The hydraulic turbine is installed on stream water flow of pipe a 11 meter drop where part of the water is booked in a geometrical manner with sufficient pressure to generate full power, the hydraulic turbine is installed on stream water flow from this tube where part of the water is booked in a geometrical manner with sufficient pressure to generate full power.

Q=250 m3/s

A = 22/7 D2/4 = 22/7*(11)2 /4 = 95.1m^2

V=Q/A = 250/95.1 = 2.63 m/s

5.1.2 Hydro Features

Type: GDM-WLP-120+20°

Design Head (m): 9.7 m

Design Flow (m/s): 4.92 m/s

Power (kW): 398 Kw

Rated Speed (r/min): 500 r/min

Diameter: 120 cm

5.1.3 Generator

Type: SF320-12/990

Rated Power (Kw): 320 KW

Rated Voltage (v): 400 V

Speed governor: YWT-600 [19]**.**



Figure 5.1 Hole Bulb Tubular Turbine.

5.2 PV System

Photovoltaic (PV) or solar cells as they are often called, are semiconductor devices that convert sunlight into direct current (DC) electricity. Groups of PV cells are electrically configured into modules and arrays, which can be used to charge batteries, operate motors, and to power any number of electrical loads. With the appropriate power conversion equipment, PV systems can produce alternating current (AC) compatible with any conventional appliances, and can operate in parallel with, and interconnected to, the utility grid.

Simply put, PV systems are like any other electrical power generating systems, just the equipment used is different than that used for conventional electromechanical generating systems. However, the principles of operation and interfacing with other electrical systems remain the same, and are guided by a well-established body of electrical codes and standards.

Although a PV array produces power when exposed to sunlight, a number of other components are required to properly conduct, control, convert, distribute, and store the energy produced by the array.

The specific components required may include major components such as a DC-AC power inverter, battery bank, system and battery controller, auxiliary energy sources and sometimes the specified electrical load (appliances). In addition, an assortment of balance of system (BOS) hardware, including wiring, overcurrent, surge protection and disconnect devices, and other power processing equipment.

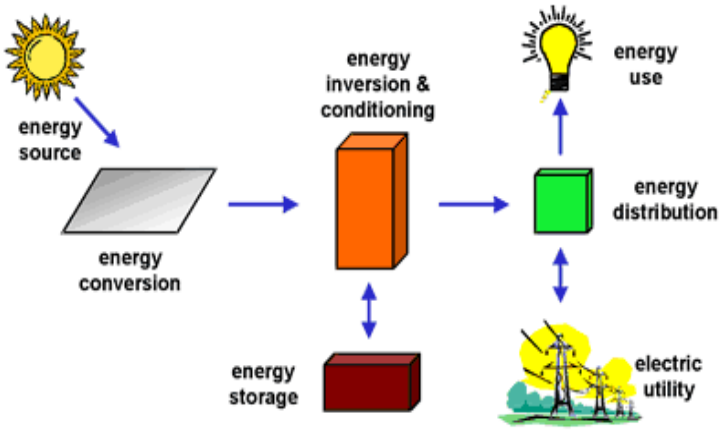

Figure 5.2 PV system

5.2.1 PV Cells Work

A typical silicon PV cell is composed of a thin wafer consisting of an ultra-thin layer of phosphorus-doped (N-type) silicon on top of a thicker layer of boron-doped (P-type) silicon. An electrical field is created near the top surface of the cell where these two materials are in contact, called the P-N junction. When sunlight strikes the surface of a PV cell, this electrical field provides momentum and direction to light-stimulated electrons, resulting in a flow of current when the solar cell is connected to an electrical load [20].

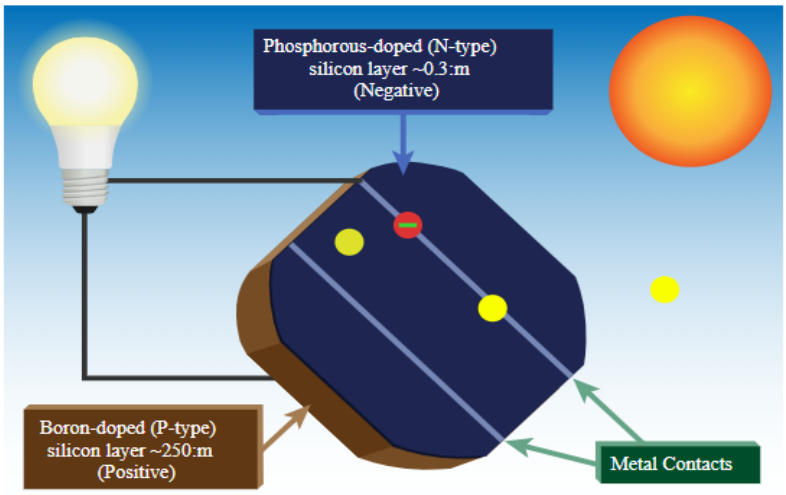

Figure 5.3 Diagram of a photovoltaic cell

5.2.2 Cells, Modules& Arrays

Photovoltaic cells are connected electrically in series and/or parallel circuits to produce higher voltages, currents and power levels. Photovoltaic modules consist of PV cell circuits sealed in an environmentally protective laminate, and are the fundamental building blocks of PV systems. Photovoltaic panels include one or more PV modules assembled as a pre-wired, field-installable unit. A photovoltaic array is the complete power-generating unit, consisting of any number of PV modules and panels.

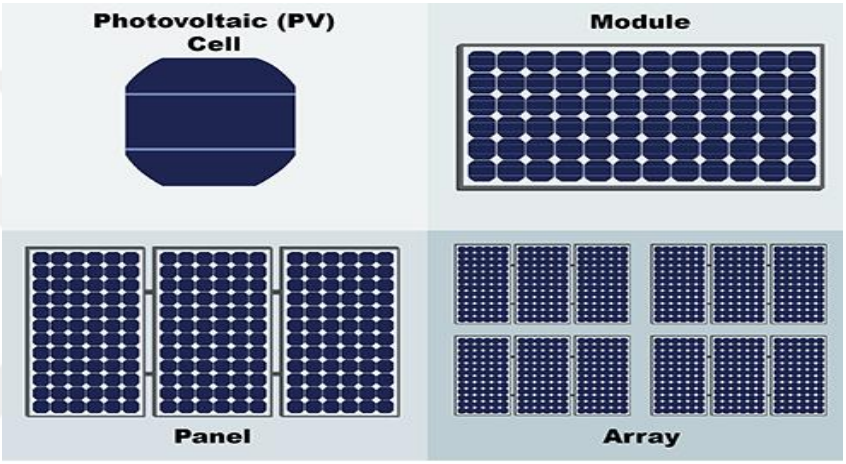

Figure 5.4 Photovoltaic cells, modules, panels and arrays.

5.2.3 Types of Solar Panels

Solar panels are divided according to their efficiency.

1. Mono-Cristallin: It is considered the best solar panels in terms of efficiency.

2. poly-cristallin: Less efficient than the Mono-cristallin board but it is less expensive.

3. Thin film: Is characterized by flexibility and ease of installation, but the efficiency is weak compared to other types, it does not exceed 10%.

Note: The efficiency of solar panels is constantly evolving as well as species.

5.2.4 Installation of Solar Panels

- **Select the direction and angle of the solar panels**

The path of the sun compared to a fixed point in the earth varies from month to month. However, the fixed thing is that the sun rises from the east and west from the west and that the circle that is the path of the sun is vertical on the equator.

The regions of the Arab world are located north of the equator, so prefer the orientation of solar panels in the direction of the south where the sun is present.

- **Select angle of slope solar panels**

To choosing the direction of the solar panels we need a Installation angle of panels. Latitude degree = 41.5518226◦

- Fall and spring season: angle of inclination = Latitude degree.
- Summer: angle of inclination = Latitude degrees - 15 degrees.
- Winter: angle of inclination = Latitude degrees + 15 degrees.
- Measured in kWh/m^2/day onto a horizontal surface [21].

5.2.5 Inverters

An inverter is an electrical device which accepts electrical current in the form of direct current (DC) and converts it to alternating current (AC). For solar energy systems, this means the DC current from the solar array is fed through an inverter which converts it to AC. This conversion is necessary to operate most electric devices or interface with the electrical grid. Inverters are important for almost all solar energy systems and are typically the most expensive component after the solar panels themselves.

Most inverters have conversion efficiencies of 90% or higher and contain important safety features including ground fault circuit interruption and anti-islanding. These shut down the PV system when there is a loss of grid power [24].

5.3 Wind Turbines Energy

Wind is a cubic energy resource. As the wind speed increases, the power available increases cubically. This means that it's very important to get into higher wind speeds, and the way we do that is with taller towers. Regardless of the turbine or tower type, going higher is the tried-and-true, reliable way to increase performance in a wind generator. And the most common mistake in wind electricity is installing a turbine on a short tower.

Betz' theorem says we can only get about 60% of the energy out of the wind before we start slowing it down too much and actually decreasing performance. In the real world, well-designed machines can achieve about half of that [26].

Wind turbines for electric power generation can be divided according to the working method and the method of generation: [25].

- Wind turbines operating horizontally (horizontal axis) (HAWTs).
- Turbines operating vertically (vertical axis) (VAWTs).

5.3.1 South and South-Eastern Wind Sector:

The study stations vary in the frequency of this trend from the wind, where the frequency of the south-eastern wind is greater than the frequency of the southern wind, the winter season in Kirkuk station recorded the highest frequency followed by Hilla station then Mosul and the stations of the Rtaiba and Basra is equal, Where Haditha is affected by this wind because of its geographical location between the Mosul and the Ratba. As for the fall season, the Mosul station recorded the highest frequency followed by the station Ratba. There may be other wind directions, but this trend is influential and registered by the Iraqi meteorological for several years

The seasons (summer) and (spring) of the most productive seasons of electricity because in density of wind speed [26].

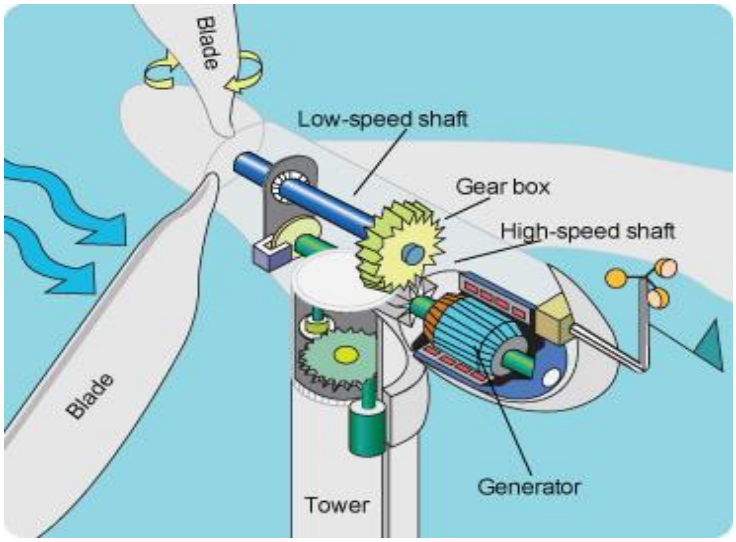

Figure 5.5 Wind turbine system

5.3.2 Converter (AC-DC / DC-AC)

The converter is used to convert the power generated for AC to DC and DC to AC due the wind speed is not proven and change constantly, therefor the amount of energy generated varies from zero to the maximum value, where it passes through several stages to get rid of the frequencies and oscillations as it passes through several stages of the capacitors and organization hardware, to produce DC power at best and then convert it to AC electricity ready to supply the load [22].

5.4 The Electric Load

The electric load is not constant, as it can change from one hour to another. This depends on several things, the most important of which is the amount of flowing groundwater, maintenance operations, opening and closing gates. As most of the maintenance work takes place during the daytime, so the need for energy in the day will be more than night and this will provide by solar panels.

So it is supposed to be a need for electricity is estimated at 450 kW continuously and the peak load 900 kW and average load 650 kW. The total daily demand for electricity is about 15.6 MW.

CHAPTER 6

OPTIMIZATION OF CLEAN ENERGY EFFICIENCY USING HOMER

HOMER is a program designed to carry out calculations of hybrid systems where it integrates more than one source and conduct an assessment of the system based on the information of the place where the system is to be established in terms of the amount of heat and wind, to find the optimal solution for the system in all its parts. Where it take a large number of options available for technology with their costs and the amount of energy available from the sources with highly sensitive algorithms to evaluate all options and find the best with interest in the economic aspect [22].

6.1 Daily Load

Can see the energy graph required for the load which peak in the morning until after noon where up to 700 KW for the use of maintenance, water pumps and offices and control of the gates of the dam cet. and maintenance work stops the rest of the day where the required power range between 300-500 watts and this depends on when the pumps operates, opening and closing gates, where this load approximately is constant in the different days during the year. It is shown in figure 6.1.

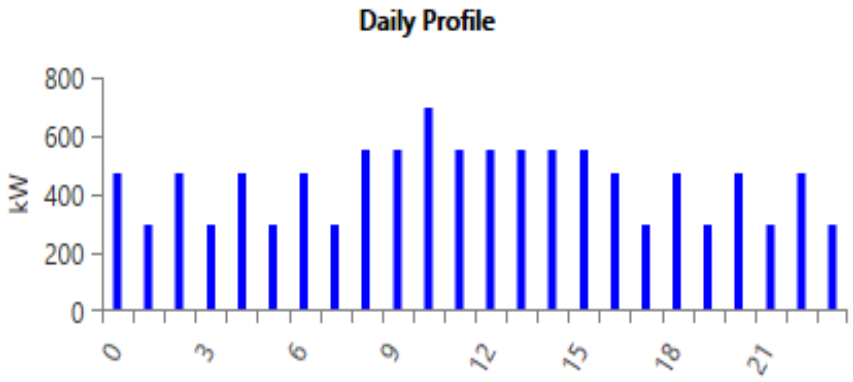

Figure 6.1 Daily profile

In case the small water turbine is stopped, the load is reduced the load used to adaptation with the generation capacity, stopping unnecessary maintenance and cutting off electricity from offices and non-essential housing.

6.2 The Energy in HADIHA Dam

6.2.1 Annual Rate of Temperature (kwh/m^2/day)

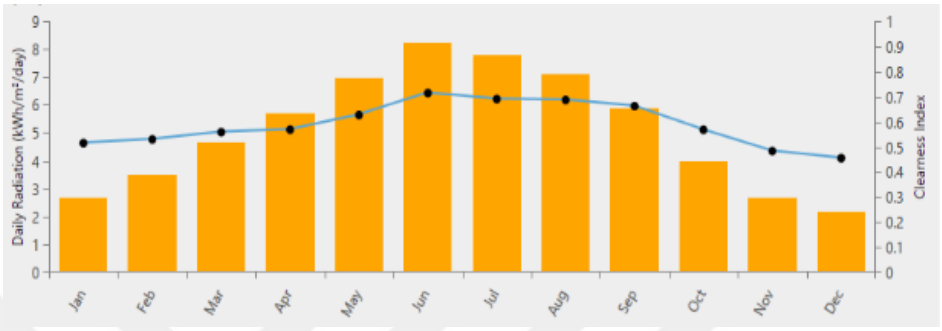

Figure 6.2 Annual rate of temperature (kwh/m^2/day)

6.2.2 Annual Rate of Wind Speed (m/s)

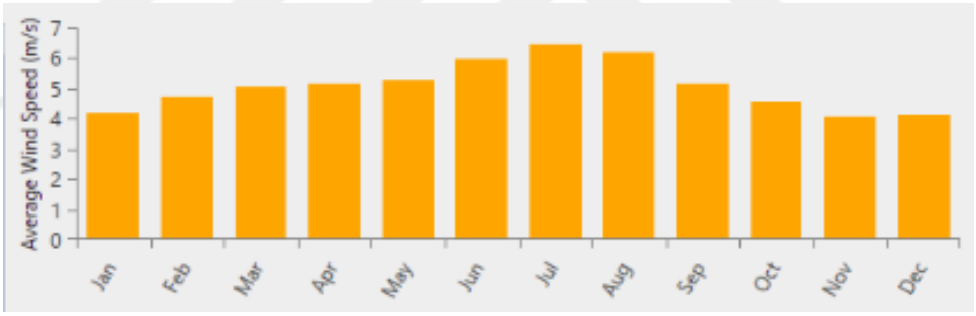

Figure 6.3 Annual rate of wind speed (m/s)

6.3 In Case the Main Turbines in the Dam Stop

If the main turbines in the dam stop, the system that provides the necessary load energy is the clean energy system (water, wind, solar energy) with the system of batteries that are used to compensate for the energy shortage in case they occur. Where there are two instances of the functioning of this system.

Section 1: Only solar and wind energy operate While the hydropower is stopped. (The water turbine is stopped in whole or in part in several cases, including stopping the generation of electricity from the main turbines with the continued flow of water

to it, which may last for several hours due to an electrical fault as well as in case of need to increase the level of water stored in the dam, allowing a small amount of water to flow through the emergency pipe).

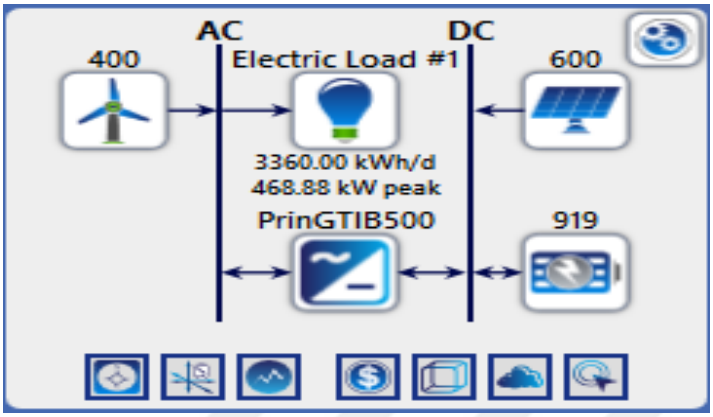

Figure 6.4 Wind and solar schematic

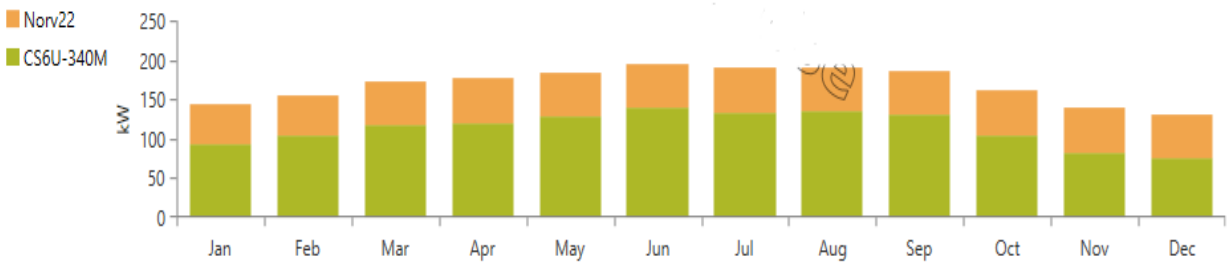

Figure 6.5 Monthly average electric production

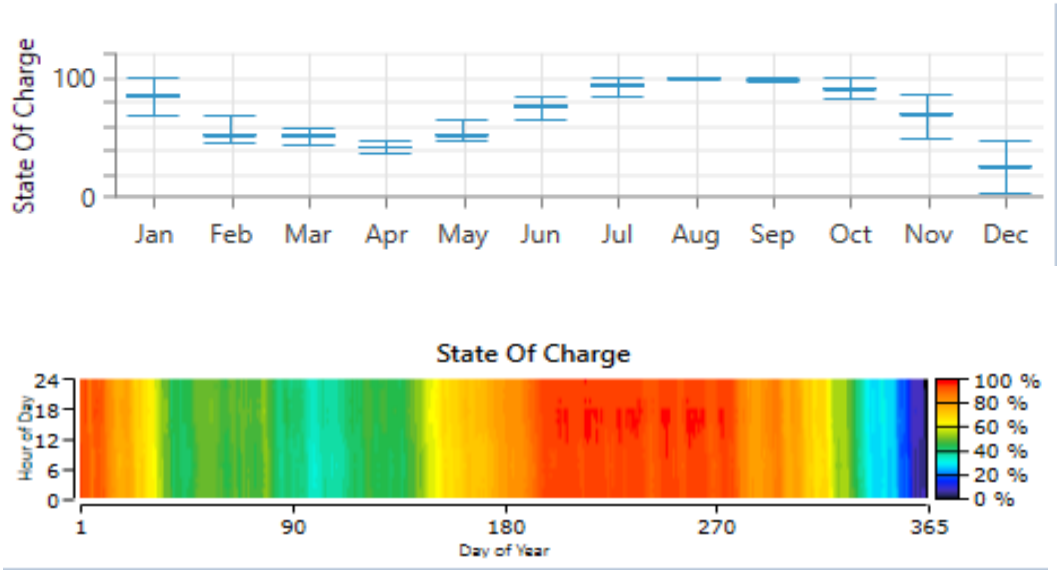

Figure 6.6 State of battery charge

Section 2: The system works with its natural capacity where it provides the required load with great flexibility to deal with any change that may arise to increase the load, where can provide a load by capacity of more than 800 kW if needed.

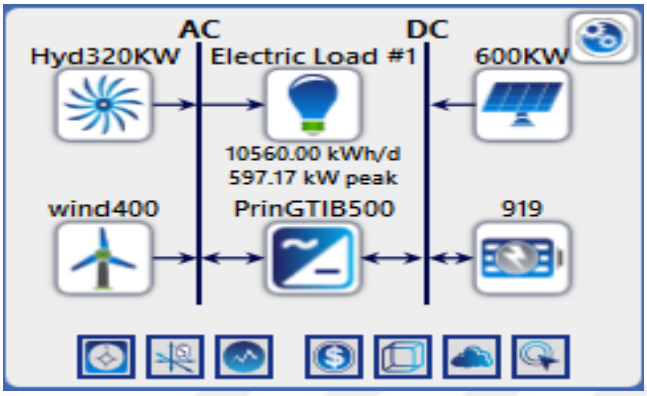

Figure 6.7 Small hydro turbine, wind turbine and solar schematic

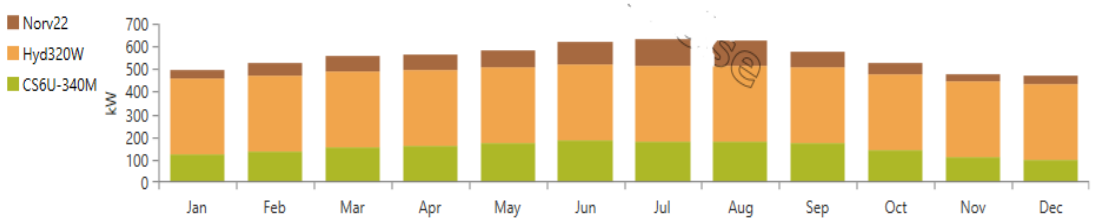

Figure 6.8 Monthly average electric production

Section 3: A signal is sent to operate the diesel generator if the total energy generated and the energy stored in the batteries is insufficient, an emergency situation where the system is designed to avoid them

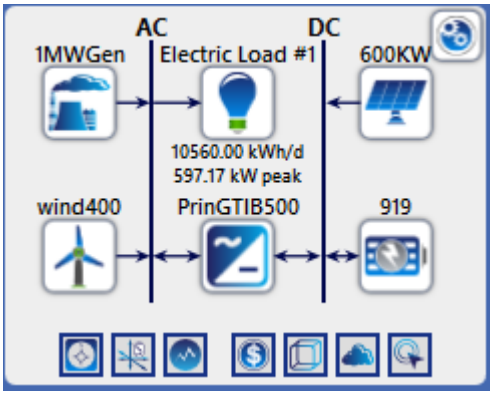

Figure 6.9 With diesel generator

6.4 In Case the Main Turbines Work in the Dam

If the main turbines work in the dam, the generated electric power is more stable. Therefor the load will be provides from the dam electricity, and the energy generated from the wind turbines and the solar panels are added to the electricity generated from the dam to supply the residential areas after charging the batteries. Where the system works as described in the section 1, with make the batteries ready to operate if the main turbines in the dam stopped.

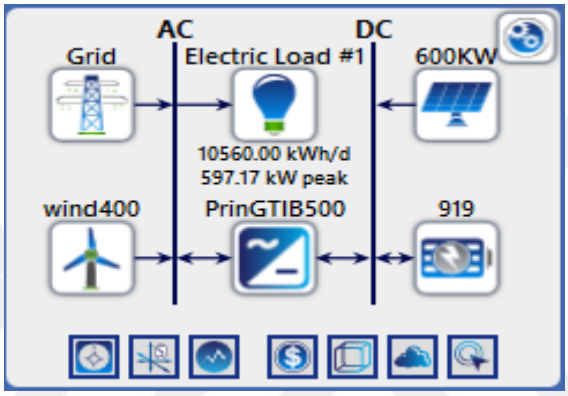

Figure 6.10 Grid with clean energy

CHAPTER 7

CONCLUSION

We have designed a control system use the clean energy sources to supply the pumps and the dam system with electric power.

By creating this system we get continuous power generation in all circumstances.

Get rid of

- the cost of high fuel
- maintenance work
- workers to operate generators.

The system will benefit from all the generated energy and not to waste any energy.

We have used clean energy sources of 600KW solar energy, 400KW wind energy, 320KW water power and 919KW batteries.

FUTURE WORK

- With the development of technology to generate electricity from solar energy and that the Anbar region in Iraq is exposed to sunlight in the summer for up to 14 hours a day and in winter for about 10 hours with the exposure of the region for clouds for very short. With these positives, this source can be exploited to generate electricity in HADITHA dam area, where the existing power transmission network can be used to send power to the areas of the Province. That is to avoid the costs of establishing power transmission lines. Wind power can also be used in addition to solar energy to make the system more efficient.
- With relatively large amounts of flowing water in the Euphrates River along the River FURAT, a large set of hydro turbines can be constructed to generate energy, to meet the growing demand for energy. With the presence of sprawling residential areas along the Euphrates River, so these units can be built near residential areas to avoid the cost of building transport lines.

REFERENCES

[1] Leake, W. "GENSET-SOLAR-WIND HYBRID POWER SYSTEM OF OFF-GRID POWER STATION FOR RURAL APPLICATIONS" Netherlands. Univ. Delft. 2010.

[2] Lakovos, T. "Combining wind and solar energy to meet demands in the built environment" Univ. Strathclyde, Glasgow, Scotland. 2006.

[3] Mukund R. " Wind and Solar Power Systems", New York. 1999.

[4] SOLARVIS. Advantages and Disadvantages of Photovoltaics. https://www.solarvis.energy/advantages-and-disadvantages-of-solar-photovoltaic/ Retrieved 20.12.2018

[5] U.S. Department of ENERGYE "Small Wind Electric Systems". http://energy.gov/energysaver/articles/small-wind-electric-systems 25.12.2018

[6] Wikipedia. Electrical Grid. https://en.wikipedia.org/wiki/Electrical_grid Retrieved 29.11.2018

[7] Tangirala, V. K. " Solar-wind hybrid energy system using MPPT" IEEE 2017 International Conference on Intelligent Computing and Control Systems (ICICCS) 10.12.2018

[8] ISPRE .Research and Development on Renewable Energies: A Global Report on Photovoltaic and Wind Energy. International Science Panel on Renewable Energies, Paris, 2017.

[9] Gary D. Burch, "Hybrid Renewable Energy System", U.S. DOE Natural Gas / Renewable Energy Workshops, Colorado, 2015.

[10] Mech4study. Hydraulic Turbine. http://www.mech4study.com/?s=Hydraulic+Turbine Retrieved 15.12.2018

[11] Group of Geoscientists _SOLARGIS. "resource maps of Iraq". https://solargis.com/maps-and-gis-data/download/iraq Retrieved 20.12.2018

[12] WEATHER FORCAST. "Iraq Weather Map", https://www.weather-forecast.com/maps/Iraq Retrieved 27.12.2018

[13] Loulensy AC Current Transformer. https://www.amazon.com/Loulensy-Current-Transformer-Signal-transducer-0-1000A/dp/B077XHVM97/ref=sr_1_2 Retrieved 27.11.2018

[15] Microcontrollers Lab. PIC 16F877A microcontroller-Introduction, http://microcontrollerslab.com/pic16f877a-introduction-features/ 10.11.2018

[16] MikroC. "Introduction to mikroC PRO for PIC. https://download.mikroe.com/documents/compilers/mikroc/pic/help/introduction_to_mikroc_pro_for_pic.htm Retrieved 07.11.2018

[17] CLECO. Relay. https://www.galco.com/comp/prod/relay.htm Retrieved 27.11.2018

[18] Proteus Design Suite - Retrieved 12.11.2018 Wikipedia. https://en.wikipedia.org/wiki/Proteus_Design_Suite Retrieved 12.11.2018

[19] Fuchun Industry Development Company. http://www.hydropower-turbine.com/sale-711338-200kw-16mw-hole-bulb-tubular-turbine-small-low-head-hydro-power-turbines.html Retrieved 27.11.2018

[20] University of Central Florida. The Florida Solar Energy Center (FSEC) is a research institute of the University of Central Florida. 2007-2014 http://www.fsec.ucf.edu/en/consumer/solar_electricity/basics/how_pv_cells_work.htm Retrieved 12.12.2018

[21]. Said, S. Solar panels and solar cells, how to install them, and how to generate electricityhttp://3ooloom.com/3ooloom/2016/10/الواح-الطاقة-الشمسية-و-الخلايا-الشمسي/ Science Blog. 2016-10-11

[22] Grinberg, R. Ebner, S. Reliability in Medium Voltage Converters for Wind Turbines ABB Switzerland Ltd, 2011 [Online]

[23] Roland, U. Okedu, K. E. Optimization of Renewable Energy Efficiency using HOMER International Journal of Renewable Energy Research . June 2014

[23] Fulzele, J. B. Dutt, S. Optimium Planning of Hybrid Renewable Energy System Using HOMER. "International Journal of Electrical and Computer Engineering (IJECE)" February 2012, pp. 68~74

[24] Photovoltaic system University of CALGARY https://energyeducation.ca/encyclopedia/Photovoltaic_system *June 25, 2018.*

[25] Owusu, P. A. Sarkodie, S. A review of renewable energy sources, sustainability issues and climate change mitigation. Middle East Technical University, Guzelyurt,Turkey https://www.cogentoa.com/article/10.1080/23311916.2016.1167990 Published: 4 April 2016

[26] Nouri, S. Al-sakinee, A. A Study in Geography of Energy. The Possibility of Employing the Winds in Iraq in Producing the Electric Energy University of Babylon. December-2014

CURRICULUM VITAE

PERSONAL INFORMATION



Name Surname : Omar Farhan AL-HARDANEE

Date of Birth : 01.02.1993

Phone : +905396808490

E-mail : omark0709@gmail.com

EDUCATION

High School : ANK'A School

Bachelor : AL-MA'MON University College

Master Degree : Ankara Yıldırım Beyazıt University

WORK EXPERIENCE

Supervision and implementation of electrical works in ((NALYA Company)), in 2016

Research Assist. : Ankara Yıldırım Beyazıt University

TOPICS OF INTEREST

- Control System (MikroC, C ..)
- Electronic Circuits
- Renewable Energy
- Electrical Vehicles