Research Square

Preprints are preliminary reports that have not undergone peer review.
They should not be considered conclusive, used to inform clinical practice,
or referenced by the media as validated information.

Widely Flatness Gain Bandwidth with Double Pass Parallel Hybrid Fiber Amplifier

Irfan Alp Gurkaynak
Ankara Yildirim Beyazit University
Mohammed Kamil Salh Al-Mashhadani
Ankara Yildirim Beyazit University
Mudhafar Hussein Ali (muthafarh@yahoo.com)
Al-Iraqia University https://orcid.org/0000-0001-8447-5502
Thamer Fahad Al-Mashhadani
Ankara Yildirim Beyazit University: Ankara Yildirim Beyazit Universitesi
Abdullah Erkam Gunduz
Ankara Yıldırım Beyazıt Üniversitesi: Ankara Yildirim Beyazit Universitesi
Murat Yucel
Gazi University: Gazi Universitesi
Halim Haldun Goktas
Ankara Bilim Üniversitesi: Ankara Bilim Universitesi

Research Article

Keywords: Parallel HFA, Erbium amplifier, Raman amplifier, Raman Scattering

Posted Date: March 11th, 2021

DOI: https://doi.org/10.21203/rs.3.rs-268443/v1

License: This work is licensed under a Creative Commons Attribution 4.0 International License.
Read Full License

Noname manuscript No.
(will be inserted by the editor)

Widely Flatness Gain Bandwidth with Double Pass Parallel Hybrid Fiber Amplifier

Irfan Alp Gurkaynak · Mohammed Kamil Salh Al-Mashhadani · Mudhafar Hussein Ali · Thamer Fahad Al-Mashhadani · Abdullah Erkam Gunduz · Murat Yucel · Halim Haldun Goktas

Received: date / Accepted: date

Abstract A Widely flatness gainbandwidth with double pass parallel hybrid fiber amplifier is experimentally demonstrated in this study. The proposed design combines serial erbium–Raman fiber amplifier in one branch and Raman fiber amplifier in the second branch. Multiple Raman pump units with a maximum power of 800 mW (250 mW of 1410 nm, 225 mW of 1480 nm, and 325 mW of 1495 nm) are utilized. Pump recycling technique is applied to achieve acceptable pumping efficiency. A maximum flatness gain bandwidth of 80 nm (1525–1605 nm) and average gain level of 22.5 dB are obtained at a small input signal power of -25 dBm and optimum pump power values. By comparison, a wider flatness gain of 90 nm (1520–1610 nm) and average gain level of 11.5 dB are achieved at a large input signal power of -5 dBm.

Keywords Parallel HFA · Erbium amplifier · Raman amplifier · Raman Scattering

Irfan Alp Gurkaynak
Ankara yildirim Beyazit University, Department of Electrical-Electronics Engineering, Ankara, Turkey

Mohammed Kamil Salh Al-Mashhadani
Ankara yildirim Beyazit University, Department of Electrical-Electronics Engineering, Ankara, Turkey
Tikrit University, Department of Electrical Engineering, Saladdin, Iraq

Mudhafar Hussein Ali
Al-Iraqia University, College of Engineering, Network Engineering Department, Baghdad, Iraq

Thamer Fahad Al-Mashhadani
Ankara yildirim Beyazit University, Department of Electrical-Electronics Engineering, Ankara, Turkey E-mail: talmashhadai@ybu.edu.tr

Abdullah Erkam Gunduz
Ankara yildirim Beyazit University, Department of Electrical-Electronics Engineering, Ankara, Turkey

Murat Yucel
Gazi University Faculty of Technology, Department of Electrical-Electronics Engineering, Ankara, Turkey

Halim Haldun Goktas
Ankara Bilim University, Department of Electrical and Electronics Engineering, Ankara, Turkey

1 Introduction

Raman fiber (RFA) and erbium-doped fiber (EDFA)amplifiers have been combined as a hybrid-fiber amplifier (HFA) by many researchers. The new HFA demonstrates enhanced amplifier performance in terms of large fiber span, wide gain flatness bandwidth, and improved pump efficiency[1,2,3,4]. A serial combination was performed first between the two amplifiers to form a serial hybrid-fiber amplifier (SHFA)[5,6,7, 8,9]. SHFA generally has one single path with two amplification stages. Input signal is inserted into the first amplifier for the first amplification and then amplified signal is inserted as an input signal into the second amplifier. Saturation will likely occur and be effective, especially if the peak bandwidth of both amplifiers includes the same signal wavelength, due to the cascading process. Although the SHFA scheme can achieve high gain level, early saturation, and narrow flatness gain bandwidth, limited input signal power range can also occur. A flatness gain bandwidth of 76 nm (1531.5–1607.5 nm) was recorded. Double-pass SHFA with a maximum pump power of 1.4 W obtained aflatness gain bandwidth of 70 nm (1530–1600 nm) [5]. Flatness gain bandwidth of 76 nm(1531.5-1607.5 nm) was recorded. Double-pass SHFA with a maximum pump power of 1.4 W was presented by [6]. Flatness gain bandwidth of 70 nm (1530-1600 nm) was obtained. Complex fiber Bragg grating arrays introduced [7] into the SHFA configuration obtained an enhanced gain variation of 65 nm (1530–1595 nm) with a small gain variation of 0.2 dB. A partial double pass EDFA with hybrid gain medium was proposed by [8]. Up to 17.2 dB gain level that uned over flat gain bandwidth of 55 nm from 1545 to 1600 nm was presented at large input signal power of -10 dBm. However, no flatness gain bandwidth was recorded at small input signal power of -30 dBm and high noise fiugere of 10.6 dB was recrded. At same large input signal power of -10 dBm, a gain level of 19 dB and noise figure of 9.3 dB were achieved by[9]. However, flatness gain bandwidth was reduced to 45 nm (1555-1600) and no study was conducted at low input signal power. Parallel HFA (PHFA) was proposed by many researchers to avoid gain saturation and limited gain dynamic range caused by the cascading process in SHFA[10, 11,12,13,14]. The cascading effect was absent, but the signal was divided into two different individual amplifiers for re-accumulation in the PHFA. The input signal was divided according to its wavelength (C-band to EDFA and L-band to RFA) in previous PHFA configurations [11,12]. A single Raman pump power of 1480 nm with a percentage ratio of 29:1 was delivered to the RFA and EDFA. The C- and L-bands demonstrated an average gain of 14 and 13.6 dB, respectively,[11]. Which enhanced the gain level variation from 9.8 dB to 0.5 dB. However, dividing the signal according to the wavelength (C-band for EDFA and L-band for RFA) can present two different power saturation values [12]. EDFA typically generates faster gain saturation compared with RFA. Therefore, a large input signal power can induce degradation in the EDFA branch. The input signal power was divided into two PHFA branches instead of dividing the input signal wavelength to prevent this limitation [13,14]. Gain control technique is used in PHFA to control the amount of input signal power to each amplifier. A wide flatness gain bandwidth of 60 nm (1530–1590 nm) and an average gain level of 14 dB were observed using 800 mW of Raman pump power at 1480 nm[13]. The implementation of double-pass PHFA achieved an enhancement of 38.5

% and 18.7 % in gain level and pump power, respectively [14]. However, two major limitations still exist, namely, phase mismatch between amplified signals after these two branches due to the long signal propagation in DCF and possible absence of dispersion compensation in EDF. Another DCF fiber is connected serially to the EDFA branch in PHFA to overcome these two limitations [15, 16, 17]. The PHFA design with multiple Raman pump power units (800 mW of 1480 nm and 300 mW of 1495 nm) was reported by [15]. However, a gain level of only 13.38 dB and a flatness gain bandwidth of 62.5 nm were achieved although high pump power was used. The gain control technique was proposed in the PHFA setup with a maximum Raman pump power of 1.4 W for multiple pump power units[16]. The flatness gain bandwidth and the average gain slightly increased to 65 nm and 16 dB, respectively. Thirty-two input channels were examined in the PHFA design under the same parameters presented by[16] and the system showed acceptable amplification performance in terms of dispersion issue and phase matching[17]. Low and limited flatness gain levels were the main degradation products in previous studies. A dual stage double pass PHFA was reported by [18]. wide flatness gain bandwidth of 80 nm (1525-1605) was achieved at large input signal power of -10 dBm but in the expense of gain level that is reletively low of about 12 dB. In addition, the flatness gain bandwidth was reduced to 30 nm (1535-1565 nm). A double-pass PHFA is experimentally demonstrated in this study. Only 800 mW of Raman pump power (250 mW for 1410 nm, 225 mW for 1480 nm, and 325 for 1495 nm) is used. A broad flatness gain bandwidth of 80 nm (1525-1605 nm) with an average gain of 22.5 dB are presented at a small input signal power of -25 dBm, whereas a wider flatness gain of 90 nm (1520–1610 nm) with an average gain of 16.5 dB and 11.6 dB is achieved for a large input signal powers of -10 and -5 dBm respectively.

2 Experimental setup

Figure 1illustrates the experimental setup of the proposed double-pass PHFA. Tunable laser source (TLS) with a wavelength range of 150 nm (1480–1630 nm) with a maximum power of 14 dBm was used as the input signal power. Variable optical attenuator was connected directly after TLS to control the input signal power range. A three-port circulator (Cir) was utilized to measure the amplified signal at port 3 and prevent any feedback from reaching TLS.

The input signal was divided into two equal parts using a 1×2 coupler and then directed to amplifier branches. EDFA, which consists of 3 m of normal EDF concentration, was connected serially to 7 km of DCF (dispersion parameter of $-110ps/nm/km$, total loss of $4.4dB$, effective area of $18.5\mu m^2$, and a nonlinear coefficient of $14.5 \times 10^{-10}W^{-1}$) and pumped by the residual pump power of 1480 nm. DCF was pumped by two Raman pump units with a maximum power of 575 mW (250 mW of 1410 nm and 325 mW of 1495 nm) as RFA. Second Cir was connected to the end of the first branch to achieve double-pass amplification in this branch. Only RFA, which consists of 7 km DCF with the same specifications as the first DCF, was pumped by 225 mw of 1480 nm and inserted in the second amplifier branch. Another Cir was connected to achieve double-pass amplification in the second branch and recycle the signal back

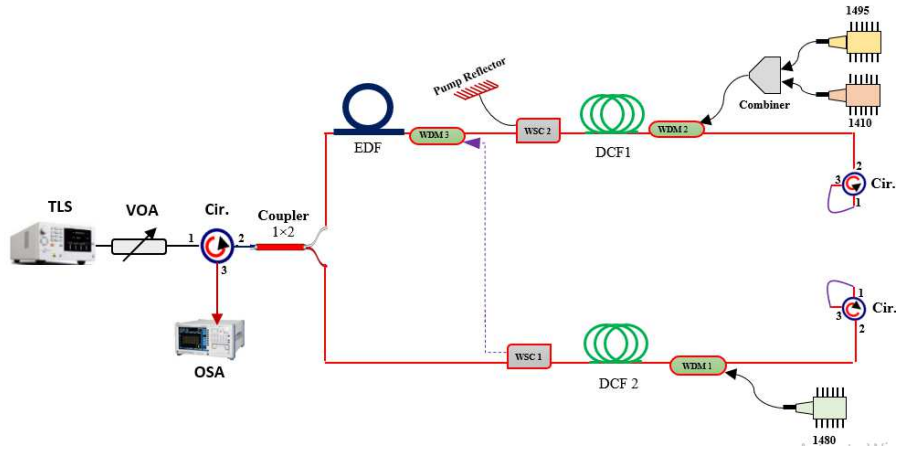

Fig. 1: Experimental setup of the proposed double-pass PHFA.

to RFA. An optical spectrum analyzer (OSA) was utilized to record amplified optical signals.

3 Theoretical background for gain and noise figure

the proposed hybrid fiber amplifier is a result of combining of double pass serial EDFA, RFA in the first branch and RFA in the second branch as dipected in Fig. 1. The total gain of the proposed amplifier can be expressed as follows:

$$G_H = \frac{P_{out}}{P_{in}} \tag{1}$$

$$P_{out} = \left[0.5P_{in}(G_{EDFA}G_{RFA})_{(DP)} + 0.5P_{in}(G_{RFA})_{(DP)}\right]\alpha_C\alpha_{Cir} \tag{2}$$

where: $P_{in}(mW)$ is the input signal power, $P_{out}(mW)$ is the output signal power, $(G_{EDFA})_{(DP)}$ and $(G_{RFA})_{(DP)}$ are the double pass gain factor of the Erbium and Raman, respectively, α_C: coupler losses, α_{Cir}: circulator losses. Therefore, the gain factor of the proposed douple-pass PHFA can be written as a function of λ as follows:

$$G_H(\lambda) = \left[G_{EDFA(\lambda)}G_{RFA(\lambda)}G_{RFA(\lambda)}G_{EDFA(\lambda)} + G_{RFA(\lambda)DP}\right]\alpha_C\alpha_{Cir} \tag{3}$$

In addition, G_{EDFA} and G_{RFA} were calculated in [19] and [20] respectively as the output signal power ratio to the input signal power:

$$G_{EDFA} = \frac{P_{(L)}}{P_{(0)}} \tag{4}$$

$$G_{RFA} = \frac{P_{(L)}}{P_{(0)}} \tag{5}$$

where: $P_{(0)}$ is the inserted signal power to both of $EDFA$ and RFA and $P_{(L)}$ represents the amplified signal after these two amplifiers.

on the other side, the noise figure of the $EDFA$ was obtained by [19]:

$$NF_{EDFA}(dB) = 10log\frac{P_{ASE_{(E)}}}{h\nu G_{EDFA}B_0} + \frac{1}{G_{EDFA}} \tag{6}$$

where $P_{ASE_{(E)}}$: $EDFA$ noise, h: Planck's constant, ν: input signal frequency in Hz, B_o: ASE bandwidth in Hz

while the noise figure in RFA was estimated by [21] as follows:

$$NF_{RFA}(dB) = 10log\frac{2P_{ASE_{(R)}}}{h\nu G_{RFA}B_0} + \frac{1}{G_{RFA}} \tag{7}$$

where $P_{ASE_{(R)}}$ is the noise generated in Raman amplifier.

Corresponding to Fig. 1, the proposed amplifier has serial of Erbium-Raman amplifier in the first branch. In this conext, the noise figure of the serial hybrid fiber amplifier was calculated by [19,21]:

$$NF_{SHFA} = NF_1 + \frac{NF_2 - 1}{G_1} \tag{8}$$

Therefore, the noise figure of the first amplifier branch can be written as follows:

$$NF_{dB} = \left(10log\frac{P_{ASE_{(E)}}}{h\nu G_{EDFA}B_0} + \frac{1}{G_{EDFA}}\right) + \frac{\left(10log\frac{2P_{ASE_{(R)}}}{h\nu G_{RFA}B_0} + \frac{1}{G_{RFA}}\right) - 1}{G_{EDFA}} \tag{9}$$

While the noise figure for the second amplifier branch is:

$$NF_{RFA}(dB) = 10log\frac{2P_{ASE_{(R)}}}{h\nu G_{RFA}B_0} + \frac{1}{G_{RFA}} \tag{10}$$

Finally the total hybrid noise figure of the proposed ampilifier can be obtianed by add Eq.s 9 and 10:

$$NF_{dB}(H) = \left(10log\frac{P_{ASE_{(E)}}}{h\nu G_{EDFA}B_0} + \frac{1}{G_{EDFA}}\right) + \frac{\left(10log\frac{2P_{ASE_{(R)}}}{h\nu G_{RFA}B_0} + \frac{1}{G_{RFA}}\right) - 1}{G_{EDFA}} + 10log\frac{2P_{ASE_{(R)}}}{h\nu G_{RFA}B_0} + \frac{1}{G_{RFA}} \tag{11}$$

4 Results and Discussions

Amplified spontaneous emission (ASE) of the proposed double-pass PHFA in the absence of the input signal power is shown in fig. 2. ASE is important in any amplifier design because it generally reflects the obtained amplification band. Both pump power values of 1410 and 1495 nm were optimized at 250 and 325 mW, respectively. Optimization is then performed for the pump power of 1480 nm to achieve a wide flatness spectrum. The pump power of 1480 nm varied from 150 mW to 325 mW with a step of 50 mW, as shown in Fig. 2 a. The ASE spectrum clearly showed better flatness of 225 mW at a pump power of 1480 nm that can achieve a wide gain flatness of the proposed amplifier. The effect of each pump power unit on the ASE spectrum is illustrated in Fig. 2 b. The spectrum recorded at optimum pump power values of 250, 325, and 225 mW corresponded to 1410, 1495, and 1480 nm, respectively. Making 1410 nm off, the contribution gain at the 1610 nm region was reduced, while the first-order Raman gain at 1595 nm was highly exaggerated by making 1495 nm off. By comparison, all the spectra were affected, especially in the C-band region (1520–1570 nm),when 1480 nm was off due to the absorption peak in EDF. The effect of EDF minimized and the ASE spectrum showed poor reduction when the distance from this region increased.

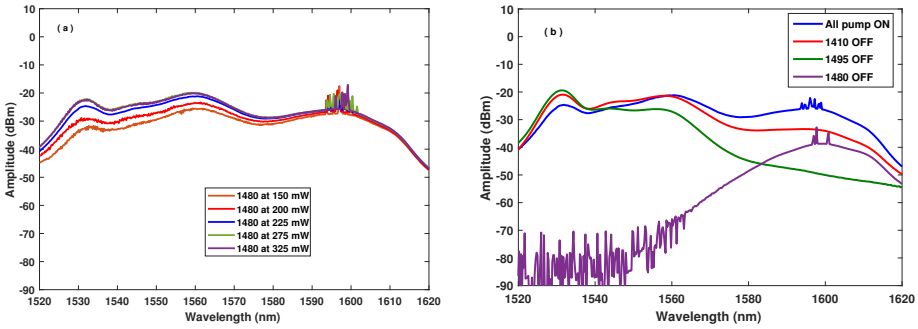

Fig. 2: (a): ASE spectrum at optimum 1410 and 1495 pump power of 250 and 325 mW and at different 1480 pump powers (b): ASE at optimal pump powers with different conditions.

The gain spectrum and the noise figure of the proposed double-pass PHFA is shown in Fig. 3. The results were obtained at the optimum pump power values of 250, 325, and 225 mW for 1410, 1495, and 1480 nm, respectively. The gain spectrum was recorded within 110 nm (1520–1630 nm). A flatness gain bandwidth of 80 nm (1525–1605 nm) demonstrated a maximum gain variation of 3dB at a small input signal power of -25 dBm, as shown in Fig.3 a.

Several Raman amplification peaks of 1510 (first-order Raman peak gain produced by a pump power of 1410 nm), 1595 (first-order Raman peak gain provided by a pump power of 1495 nm), and 1580 (first-order Raman peak gain released by a pump power of 1480 nm)nm and the contribution gain of 1610 nm (tail gain related

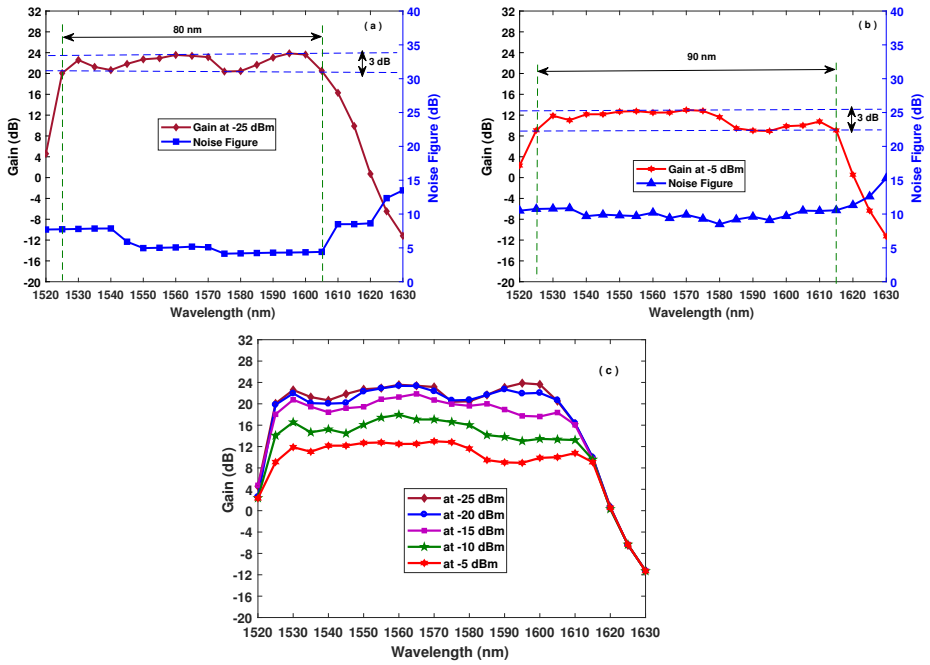

Fig. 3: Gain spectrum and noise figure (a): at high input signalpower of -25 dBm (b): at high input signal power of -5dBm (b): gain spectrum at different input signal powers.

to a pump power of 1410 nm) promoted the EDFA peak gain (1530–1570 nm) to achieve a wide flatness gain bandwidth. Both RFA and EDFA were still unsaturated when a low signal power was used. Therefore, the EDFA gain can be reduced by optimizing the pump power of 1480 nm to achieve satisfactory amplifier performance. In addition, an acceptable noise figure value of nearly 5 dB was recorded within the entire gain bandwidth likely due to the residual pump power extraction. The gain spectrum was examined at a large input signal power of -5 dBm to demonstrate the effect of the gain saturation, as shown in Fig. 3 b. A high flatness gain bandwidth of 90 nm (1525–1615 nm) was obtained, while a lower gain level of 11.5 dB was recorded on the other side. The degradation in the average gain level was due to the deep saturation in EDFA while saturating Raman amplification peaks of 1510, 1595, and 1610 nm because of their serial connection. A high noise figure of 9 dB was recorded within the gain bandwidth due to the EDFA and RFA saturation. The effect of input signal power was demonstrated in the variation from -25 dBm to -5 dBm, as shown in Fig. 3 c. The results clearly showed the satisfactory performance of the proposed amplifier, which can operate up to -15 dBm without a saturation effect. Finally, the results of our design exhibited a wider gain bandwidth and larger gain level compared with the findings in [9, 10, 11, 12, 13, 14, 15, 16, 17, 18]. Table 1 summarizes the results of the performance evaluation of our work and previous studies.

Figures 4(a)–4(f) show the output spectrum of the amplified signal at different wavelengths (1525–1605 nm) measured via an OSA and at a fixed signal power of -25 dB. The optical signal-to-noise ratio (OSNR) recorded for both input and amplified signal verified the gain and noise figure illustrated in Fig.3 a.

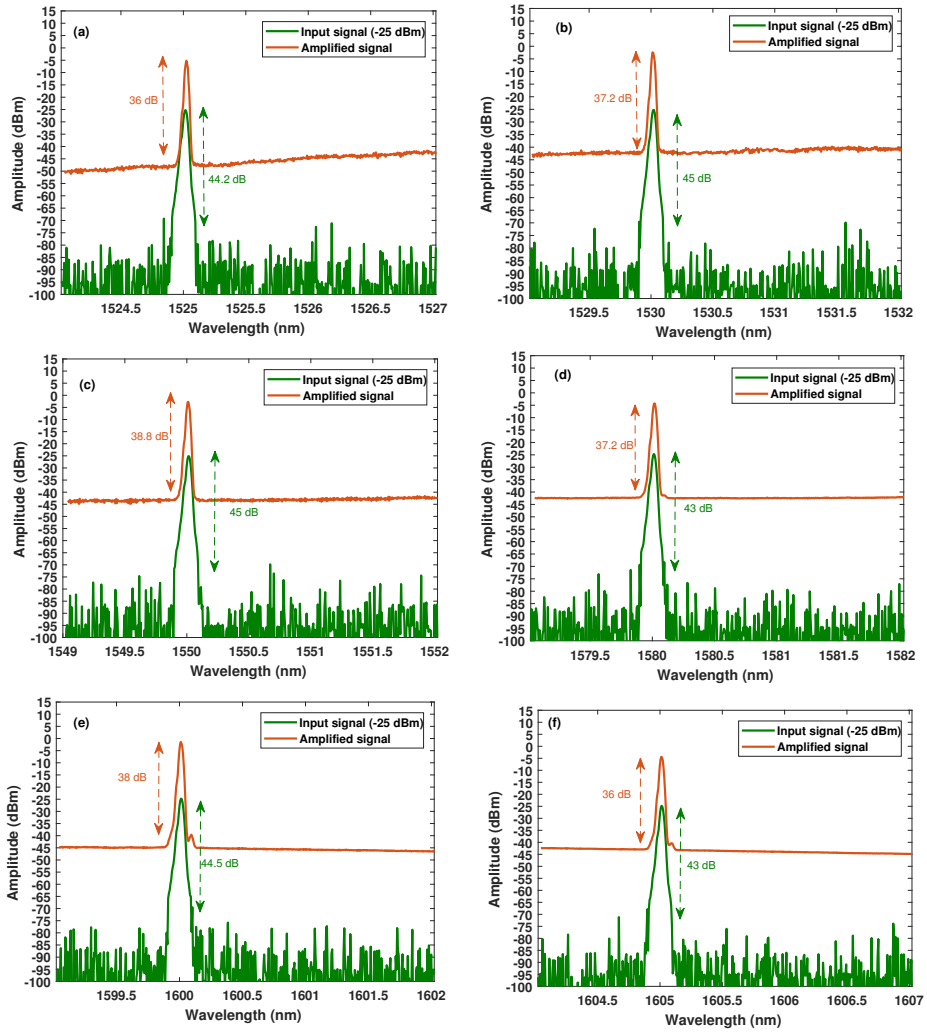

Fig. 4: Output spectrum of the input and the amplified signals at different wavelengths.

Experimental data for the gain dynamic range used as a function of the input signal power are shown in Fig. 5. The gain spectrum was recorded as a function of the input signal power variation from -25 dBm to -5 dBm with a step of 5 dBm. The

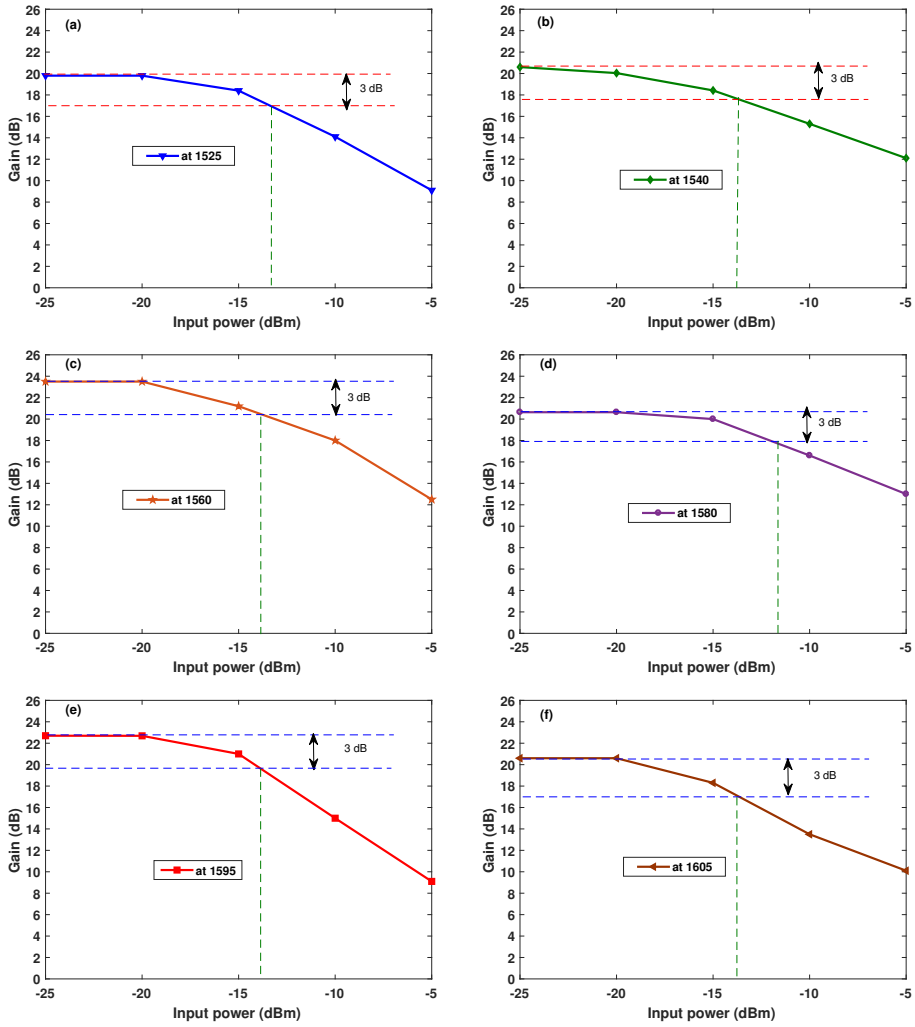

Fig. 5: Gain dynamic range at different input signal wavelengths.

gain dynamic range is the input signal power at which the maximum gain variation is 3 dB.The gain dynamic range was examined at different signal wavelengths in the flatness gain bandwidth period to illustrate the proposed amplifier performance. The gain was clearly saturated at an input signal power of -14 dBm for input signal wavelengths of 1525, 1540, and 1560 nm (Figs. 5[a]–5[c]) due to the higher effect of EDFA in such signal wavelengths. By comparison, a wider gain dynamic range was observed and the gain was saturated at an input signal power of -11 dBm for a signal wavelength of 1580 nm (Fig. 5d) due to the effect of RFA in such a wavelength in the second amplifier branch. In addition, the EDFA gain provided in this branch has no tail. Although the proposed amplifier showed a narrow gain dynamic range at signal

wavelengths of 1595 and 1605 nm (Figs. 5e and 5f) with an effective RFA in the first amplifier branch, the gain was saturated at -14 dBm due to the tail gain of EDFA that added to the RFA gain.

Table 1: Summarization of the previous studies and our presented work.

Ref. No.	Amplifier design	Utilized pump power	Flatness gain bandwidth nm (small signal)	Flatness gain bandwidth nm (large signal)	Gain level dB
[9]	DP-SHFA	1480 nm: 300 mW	15 (1550-1565)	55 (1545-1600)	17.2
[10]	Triple pass SHFA	1480 nm:300 mW	no flatness	45 (1555-1600)	19
[11]	PHFA	1480 nm: 600 mW	60 (1530-1590)	35 (1530-1555)	13.5
[12]	PHFA	1480 nm: 660 mW	65 (1530-1595)	Not mentioned	18
[13]	PHFA	1480 nm: 800 mW	60 (1530-1590)	60 (1530-1590)	14
[14]	DP-PHFA	1480 nm:650mW	60 (1530-1590)	60 (1530-1590)	22
[15]	PHFA	1480 nm: 800 mW 1495 nm: 300 **Total: 1.1 W**	62 (1530-1592)	Not mentioned	13.4
[16]	PHFA	1480 nm: 800 mW 1495 nm: 600 **Total: 1.4 W**	65 (1530-1595)	65 (1550-1595)	16
[17]	PHFA: 32 channels	1480 nm: 800 mW 1495 nm: 600 mW **Total: 1.4 W**	65 (1530-1595)	65 (1550-1595)	16
[18]	DP-PHFA	1480 nm: 160 mW 980 nm: 160 mW	30 (1535-1565)	80 (1525-1605)	12.1
our work	DP-PHFA	1480 nm: 225 mW 1495 nm: 325 mW 1410 nm: 250mW **Total: 0.8 W**	80 (1525-1605)	90 (1525-1615)	22.5

5 Conclusion

An experimental examination of double-pass PHFA related to flatness gain bandwidth, noise figure, and input dynamic range is presented in this study. The proposed structure is tested under small and large input signal power regimes to demonstrate its performance. A suitable wavelength of Raman pump unit is determined in the

obtained wide flatness gain. Tunable flatness gain bandwidths of 80 and 90 nm are achieved for small and large input signal power values, respectively, when an optimum Raman pump power of 800 mW is used. In addition, an acceptable gain dynamic range is obtained because EDFA and RFA amplifiers demonstrate different peak gain wavelengths.

6 Acknowledgments

The research leading to these results has received research funding from The Scientific and Technological Research Council of Turkey (TUBITAK) Research Grant with Code (5180072).

References

1. Ali, M.H., Abdullahi, F., Jamaludini, M.Z., AI-Mansoori, M.H., AI-Mashhadani, T.F., Abassi, A.K.: Effect of EDF Position on the Performance of Hybrid Dispersion-Compensating Raman/EDF Amplifier. 4th International Conference in Photonics (ICP). 187-189 (2013)
2. Ali, M.H, Abdullah, F., Jamaludin, M.Z., Al-Mansoori, M.H., Abass, a.K., Al-Mashhadani, T.F.: Effect of Cascading Amplification Stages on the Performance of Serial Hybrid Fiber Amplifier. Fiber and Integrated Optics. 34, 157-170 (2015)
3. Abdullah, F., Jamaludin, M.Z., Ali, M.H., Al-Mansoori, M.H., Abass, A.K., Al-Mashhadani, T.F.: Influence of Raman Pump Direction on the Performance of Serial Hybrid Fiber Amplifier in C + L-Band. 2018 IEEE 7th International Conference on Photonics (ICP). 1–3 (2018)
4. Kumar, C, Goyal, R.: Performance Analysis of Hybrid Optical Amplifiers for Super Dense Wavelength Division Multiplexing System in the Scenario of Reduced Channel Spacing. 33,159-164 (2017)
5. Masuda, H., Kawai, S., Aida, K.: 76-nm 3-dB gain-band hybrid fiber amplifier without gain-equalizer. Optical Amplifiers and Their Applications. 78-81 (1998)
6. Seo, H.S., Ahn, J.T., Park, B. J., Chung, W. J.: Double-Pass Resonant Er-Raman Amplifier. ELECTRONICS LETTERS. 43, 15-16 (2007)
7. Liaw, S.K., Huang, Y.S.: C+L-band Hybrid Amplifier Using FBGs for Dispersion Compensation and Power Equalisation. Electronics letters. 44,3-4 (2008)
8. Almukhtar, A.A., Al-Azzawi A.A., Ahmad, B.A., Cheng, X.S., Reddy, P.H., Dhar, A., Paul, M.C., Ahmad, H., Harun, S.W.: Flat-gain and wide-band partial double-pass erbium co-doped fiber amplifier with hybrid gain medium. Optical Fiber Technology. 52, 101952 (2019)
9. Almukhtar A.A., Al-Azzawi A.A., Cheng, X.S., Reddy, P.H., Dhar, A., Paul, M.C., Ahmad H., Harun S.W.: Enhanced triple-pass hybrid erbium doped fiber amplifier using distribution pumping scheme in a dual-stage configuration. Optik. 204, 164191 (2020)
10. Hsu, H., Yu, Y., Liaw, S., Liu, R., Shin, C.: Theoretical and Experimental Study of Multifunction C + L Band Hybrid Fiber Amplifiers,Optics and Laser Technology. 56,307-312 (2014)
11. Liaw, S.K., Huang, C.K., Hsiao, Y.L.: Parallel-type C+ L Band Hybrid Amplifier Pumped by 1480 nm Laser Diodes,Laser Physics Letters. 5,543-546 (2008)
12. Liaw, S., Dou, L., Xu, A., Huang, Y.: Optimally Gain-Flattened and Dispersion-Managed C+L-Band Hybrid Amplifier Using a Single-Wavelength Pump Laser. Optics Communications. 282,4087-4090 (2009)
13. Ali, M. H., Abdullah, F., Jamaludin, M., Al-Mansoori, M. H., Al-Mashhadani, T. F., Abass, A. K.: Simulation and Experimental Validation of Gain-Control Parallel Hybrid Fiber Amplifier. Journal of the Optical Society of Korea. 18,657-662 (2014)
14. Ali, M. H., Abdullah, F., Al-Mashhadani, T. F.: Gain-control technique in double-pass parallel hybrid fiber amplifier,Optical and Quantum Electronics. 52,1-7 (2020)
15. Abass, A.K., Ali, M.H., Al–Hussein, S. A.: Abd,Wideband Flat–Gain Hybrid Fiber Amplifier Utilizing Combined Serial–Parallel Configuration. International Journal of Nanoelectronics and Materials. 11,17-22 (2018)

16. Abass, A.K., Ali, M.H., Al-Hussein, S.A.A.: Optimization of Hybrid Fiber Amplifier Utilizing Combined Serial-Parallel Configuration. IOP Conference Series: Materials Science and Engineering. 454 (2018)
17. Ali, M.H., Abass, A.K. , Al-Hussein, S.A.A.: 32 Channel × 40 Gb / s WDM Optical Communication System Utilizing Different Configurations of Hybrid Fiber Amplifier,Optical and Quantum Electronics. 51,188-195 (2019)
18. Al Azzawi, A.A., Almukhtar, A. A., Reddy, P.H., Das, S., Dhar, A., Paul, M.C., Arof , H., Ahmad, H., Harun, S.W.: An efficient wideband hafnia bismuth erbium co doped fiber amplifier with flat gain over 80nm wavelength span. Optical Fiber Technology. 48, 186 193 (2019)
19. Becker, P.C., Olsson, N.A., Simpson, J.R.: Erbium-Doped Fiber Amplifiers. Academic Press. 131-152 (1999)
20. Agrawal, G.P. : Raman Amplification in Fiber Optical Communication Systems. Academic Press, 33-102,(2005)
21. Bristiel, B., Gallion, P., Jaouen, Y., Pincemin, E.: Intrinsic noise figure derivation for fiber Raman amplifiers from equivalent noise figure measurement. Proceedings of the Lightwave Technologies in Instrumentation and Measurement Conference. 135-140 (2004)

Figures

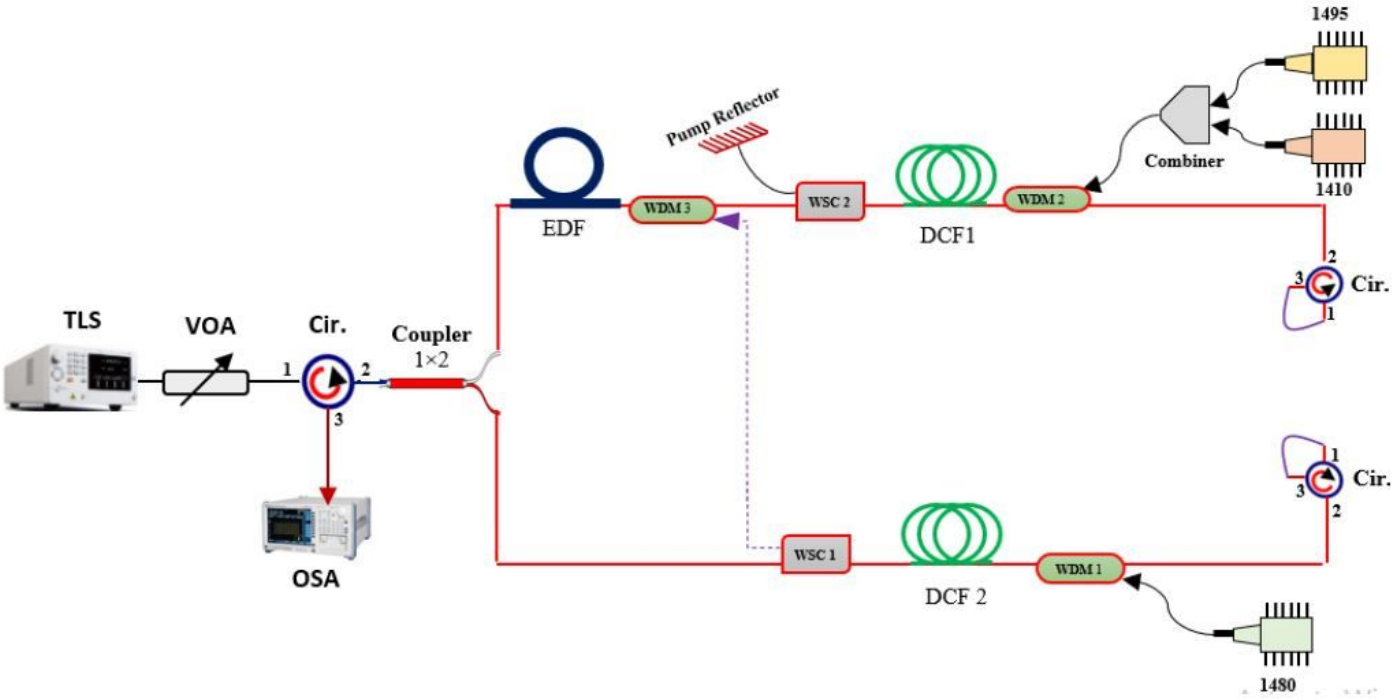

Figure 1

Experimental setup of the proposed double-pass PHFA.

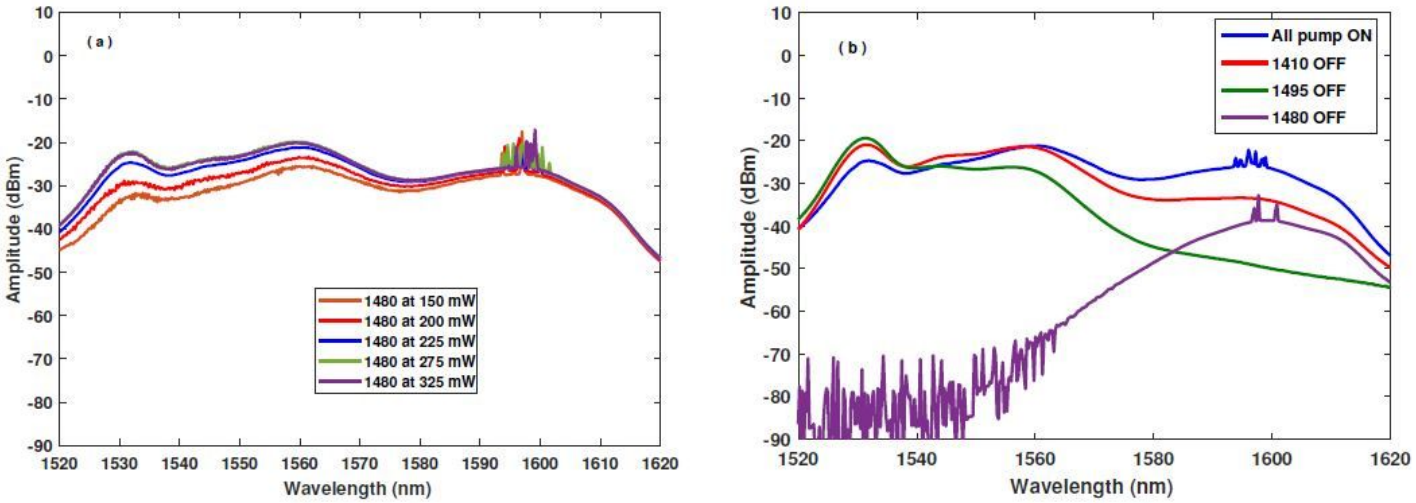

Figure 2

(a): ASE spectrum at optimum 1410 and 1495 pump power of 250 and 325 mW and at different 1480 pump powers (b): ASE at optimal pump powers with different conditions.

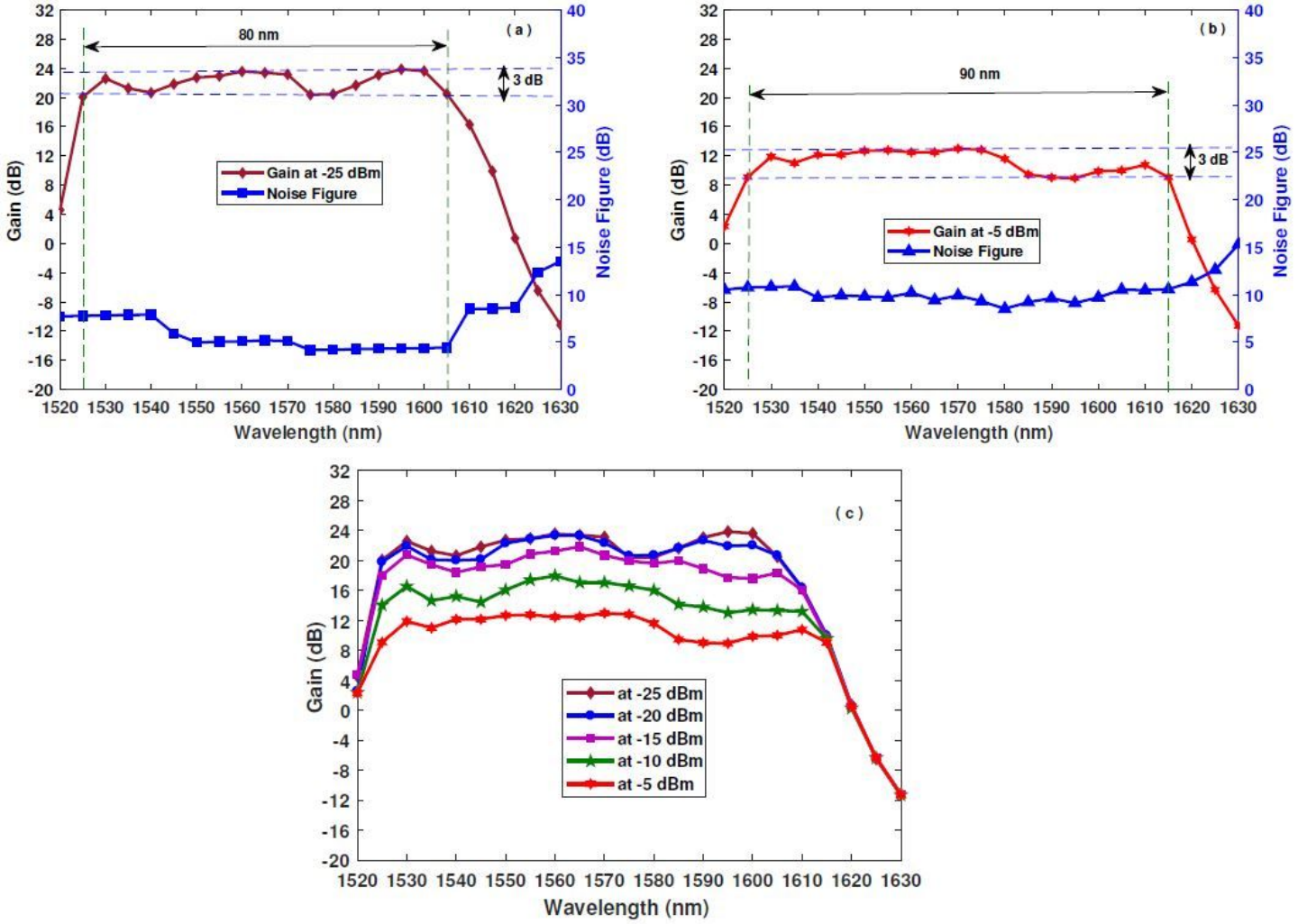

Figure 3

Gain spectrum and noise figure (a): at high input signalpower of -25 dBm (b): at high input signal power of -5dBm (b): gain spectrum at different input signal powers.

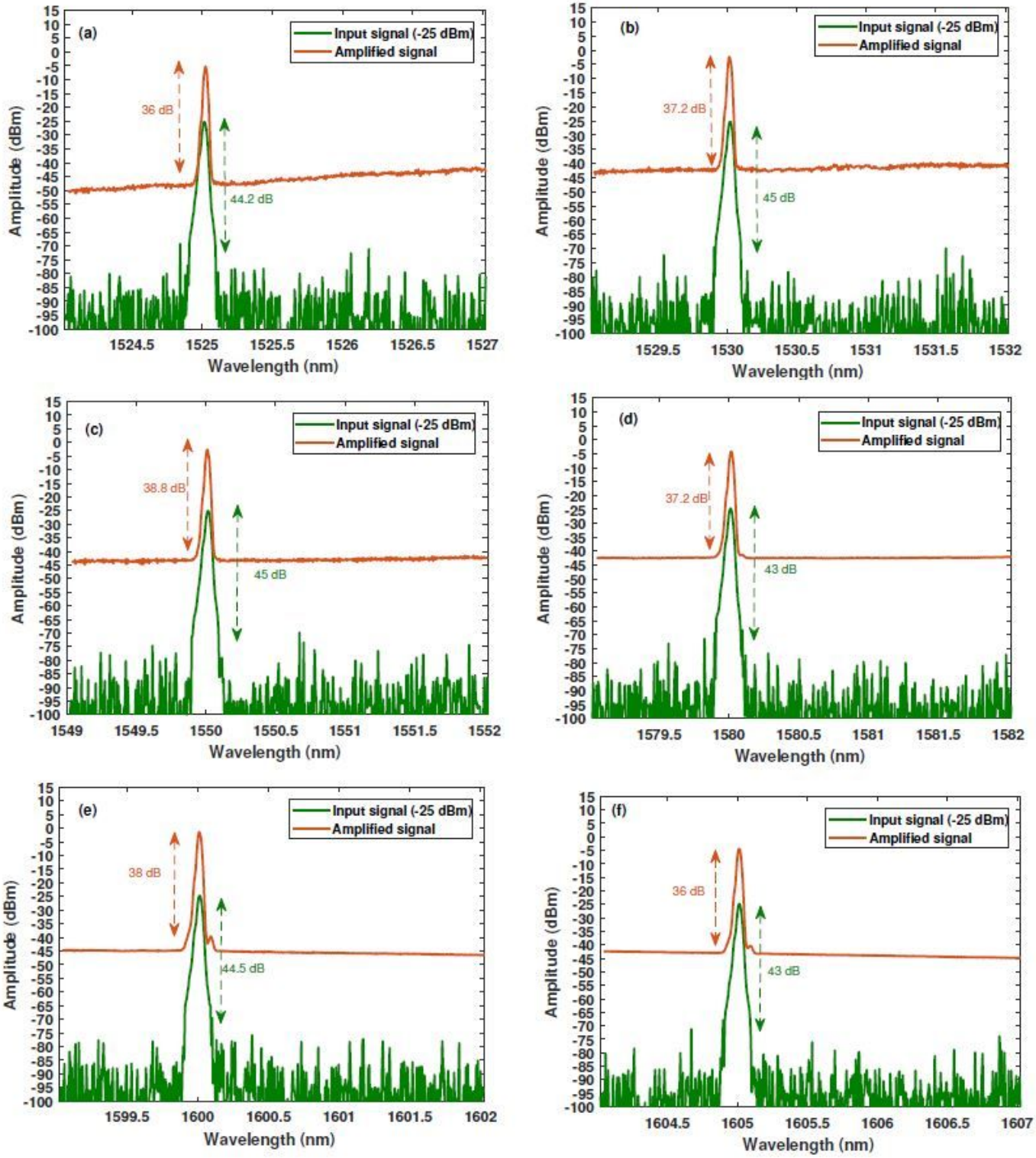

Figure 4

Output spectrum of the input and the amplified signals at different wavelengths.

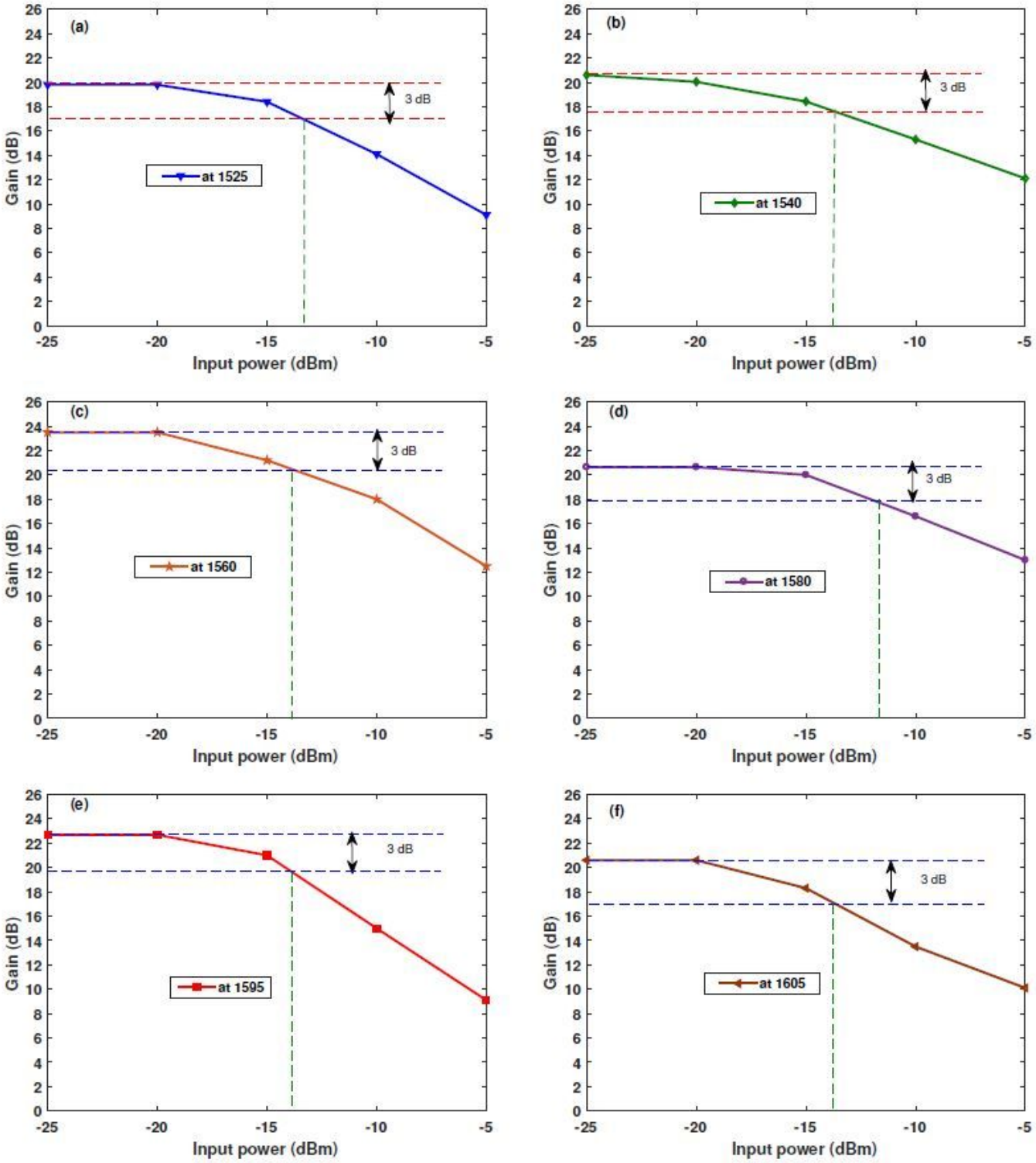

Figure 5

Gain dynamic range at different input signal wavelengths.