ANKARA YILDIRIM BEYAZIT UNIVERSITY

GRADUATE SCHOOL OF NATURAL AND APPLIED SCIENCES



AN ANALYSIS OF A MANUFACTURING COMPANY TO TRANSFORM INTO INDUSTRY_4.0 USING SYSTEMS ENGINEERING APPROACH

M.Sc. Thesis by

Gizem BABAYİĞİT

Department of Industrial Engineering

June, 2018

ANKARA

AN ANALYSIS OF A MANUFACTURING COMPANY TO TRANSFORM INTO INDUSTRY_4.0 USING SYSTEMS ENGINEERING APPROACH

A Thesis Submitted to the

Graduate School of Natural and Applied Sciences of

Ankara Yıldırım Beyazıt University

In Partial Fulfillment of the Requirements for the Degree of Master of Science in Industrial Engineering, Department of Industrial Engineering

by

Gizem BABAYİĞİT

June, 2018

ANKARA

M.Sc THESIS EXAMINATION RESULT FORM

We have read the thesis entitled "**AN ANALYSIS OF A MANUFACTURING COMPANY TO TRANSFORM INTO INDUSTRY_4.0 USING SYSTEMS ENGINEERING APPROACH**" completed by **GİZEM BABAYİĞİT** under supervision of **Prof. Dr. METE GÜNDOĞAN** and we certify that in our opinion it is fully adequate, in scope and in quality, as a thesis for the degree of Master of Science.

Prof. Dr. Mete GÜNDOĞAN

Supervisor

Prof. Dr. Ergün ERASLAN

Jury Member

Assoc. Prof. Dr. Mehmet KABAK

Jury Member

Prof. Dr. Ergün ERASLAN

Director

Graduate School of Natural and Applied Sciences

ETHICAL DECLARATION

I hereby declare that, in this thesis which has been prepared in accordance with the Thesis Writing Manual of Graduate School of Natural and Applied Sciences,

- All data, information and documents are obtained in the framework of academic and ethical rules,
- All information, documents and assessments are presented in accordance with scientific ethics and morals,
- All the materials that have been utilized are fully cited and referenced,
- No change has been made on the utilized materials,
- All the works presented are original,

and in any contrary case of above statements, I accept to renounce all my legal rights.

Date: 2018, 3 June

Signature:

Name & Surname: Gizem BABAYİĞİT

ACKNOWLEDGEMENTS

First of all, I would like to thank Yıldırım Beyazıt University for giving me the opportunity accomplish my master program. I learned invaluable knowledge and proud to be a graduate from this university.

I give a special thanks to Prof. Dr. Mete Gündoğan for taking me under his supervision, his patience and support with brilliant comments and suggestions during my thesis.

Finally, I thank my parents, Melahat BABAYİĞİT and Haydar BABAYİĞİT, for continuous support and love. I wouldn't be possible graduate without the support of them.

2018, 3 June **Gizem BABAYİĞİT**

AN ANALYSIS OF A MANUFACTURING COMPANY TO TRANSFORM INTO INDUSTRY_4.0 USING SYSTEMS ENGINEERING APPROACH

ABSTRACT

Rapid changes in technology have taken the society to the brink of Industry_4.0. It aims at digitalizing the entire production with low cost, low energy consumption and high efficiency rates. Interfaces between human and the other elements of the system are expected to be as minimum as possible. Hence, operational and maintenance functions are broken down into job operations, duties, tasks, sub-tasks and task elements to support the concept. Transformation into Industry_4.0 will change from country to country, from company to company and will require to study their current position with respect to the concept. Having such a concept identified, this thesis explains how a company can be analyzed and directed for the Industry_4.0 in an interval of a future period of time. This study has been done for a manufacturing company in OSTİM which is a very well qualified regional industrial site in Ankara. Systems Engineering concepts, approaches and techniques have been used within this context. The systems engineering approach deals with complex systems as a whole, rather than looking at functions separately. In the process of transformation to Industry_4.0, user requirements have been identified for the company with the help of Structured Systems Analysis and Design Method, SSADM. Starting from the user requirements to functional, departmental and company-wide requirements have been identified. Cost breakdown structure and its requirement of digitalization have been identified in the same way. A non-parametric analysis is also done for the identifications. At the end of all identifications, a companywide readiness level for the Industry_4.0 has been stated including a breakdown structure down to the user requirements at the shop-floor level. A practical guide is also proposed for further studies.

Keywords: Manufacturing, Systems Engineering, SSADM, Industry 4.0 , Production, Economics

ENDÜSTRİ 4.0'A GEÇİŞTE SİSTEM MÜHENDİSLİĞİ YAKLAŞIMINI KULLANARAK İMALAT YAPAN ŞİRKETİN ANALİZİ

ÖZ

Teknolojideki hızlı değişiklikler, toplumu Endüstri 4.0'ın eşiğine getirdi. Endüstri 4.0 tüm üretimi, düşük maliyetli, düşük enerji tüketimi ve yüksek verimlilik oranları ile dijitalleştirmeyi amaçlamaktadır. Bir işin başlangıcından sistemden çıkışına kadar olan süreci kapsar. İnsan ve sistemin diğer elemanları arasındaki bağlantılar mümkün olduğu kadar asgari düzeyde olmalıdır. Bu nedenle, operasyon ve bakım fonksiyonları, kavramı desteklemek için iş operasyonlarına, görevlere, görevlere, alt görevlere ve görev elemanlarına ayrılır. Endüstri 4.0'a dönüşüm, ülkeden ülkeye, şirketten şirkete değişmektedir ve mevcut konumlarını bu konsept açısından incelemeye ihtiyaç duyacaktır. Böyle bir kavramın tanımlanması, bu tezde, bir şirketin gelecekteki bir zaman dilimi içerisinde Endüstri 4.0 için nasıl analiz edilip yönlendirilebileceğini açıklamaktadır. Bu çalışma, Ankara'da çok nitelikli bir bölgesel sanayi bölgesi olan OSTİM'deki bir imalat firması için yapılmıştır. Sistem Mühendisliği kavramları, yaklaşımları ve teknikleri bu bağlamda kullanılmıştır. Sistem mühendisliği yaklaşımı, fonksiyonlara ayrı ayrı bakmak yerine karmaşık sistemlerle ilgilenir. Endüstri 4.0'a dönüşüm sürecinde, SSADM Yapılandırılmış Sistem Analiz ve Tasarım Metodu'nun yardımıyla şirket için kullanıcı gereksinimleri belirlenmiştir. Kullanıcı gereksinimlerinden fonksiyonel, departman ve şirket çapındaki gereksinimlere kadar tespit edilmiştir. Maliyet dağılımı yapısı ve dijitalleşme gereksinimi aynı şekilde belirlenmiştir. Her kullanıcı ihtiyacı için parametrik olmayan bir analiz de yapılmıştır. Tüm tanımların sonunda, Endüstri 4.0 için, firma tabanındaki kullanıcı gereksinimlerine kadar bir kırılım yapısı dahil olmak üzere, şirket çapında bir hazırlık düzeyi belirlenmiştir. Daha sonra yapılacak çalışmalar için pratik bir rehber oluşturulmak istenmiştir.

Anahtar Kelimeler: İmalat, Sistem Mühendisliği, SSADM, Endüstri 4.0, Üretim, Ekonomi

CONTENTS

M.Sc THESIS EXAMINATION RESULT FORM ii

ETHICAL DECLARATION iii

ACKNOWLEDGEMENTS iv

ABSTRACT v

ÖZ vi

LIST OF TABLES xii

LIST OF FIGURES xiv

CHAPTER 1- INTRODUCTION 1

CHAPTER 2- LITERATURE REVIEW 4

2.1 Industry 4.0 4

2.1.1 The Industrial Internet of Things 6

2.1.2. Simulation 7

2.1.3 Additive Manufacturing 8

2.1.4 Autonomous Robots 9

2.1.5 The Cloud 10

2.1.6 Horizontal and Vertical System Integration 10

2.1.7 Augmented Reality 11

2.2 System And Systems Engineering 12

2.3 Functional Flow Block Diagrams (FFBDs) 16

2.4 Technology Readiness Levels (TRL) 18

2.5 Cost 20

CHAPTER 3- IMPLEMENTATION 25

3.1 1.0 Business Management System Of ABC 27

3.2 1.1 Management 29

3.2.1 1.1.1 Management 31

3.2.1.1 1.1.1.1 Manage Customer Relationships 33
3.2.1.2 1.1.1.2 Review Activity Report 33
3.2.1.3 1.1.1.3 Review Activity Report 33
3.2.1.4 1.1.1.4 Review Activity Report 33
3.2.1.5 1.1.1.5 Follow Quality / Control Activities 33
3.2.2 1.1.2 Accounting 33
3.2.2.1 1.1.2.1 Check Contract 35
3.2.2.2 1.1.2.2 Record the documents. 35
3.2.2.3 1.1.2.3 Create Prescription 35
3.2.2.4 1.1.2.4 Create Waybill 35
3.2.2.5 1.1.2.5 Create Bill 35
3.2.2.6 1.1.2.6 Send Prescription, Waybill and Bill 35
3.2.3 1.1.3 Purchasing 35
3.2.3.1 1.1.3.1 Make Demand Verification 37
3.2.3.2 1.1.3.2 Create Material Requirement List 37
3.2.3.3 1.1.3.3 Request from Supplier 37
3.2.3.4 1.1.3.4 Bid Evaluation 37
3.2.3.5 1.1.3.5 Select Supplier 37
3.2.4 1.1.4 Production Planning 37
3.2.4.1 1.1.4.1 Check Orders 39
3.2.4.2 1.1.4.2 Create Production Schedule 39
3.2.4.3 1.1.4.3 Determine Material Requirements 39
3.2.4.4 1.1.4.4 Create Job Order 39
3.2.5 1.1.5 Quality Management 39
3.2.5.1 1.1.5.1 Check Job Order 41
3.2.5.2 1.1.5.2 Create Quality Plan 41

3.2.5.3 1.1.5.3 Determine Machine and Equipment to be Maintained and Repaired. 41
3.2.5.4 1.1.5.4 Report on Quality System 41
3.3 1.2 Manufacturing 41
3.3.1 1.2.1 Raw Material Quality Control 44
3.3.1.1 1.2.1.1 Check the raw material delivery note from the customer, the compliance report and the test report. 46
3.3.1.2 1.2.1.2 Label the raw material. 46
3.3.1.3 1.2.1.3 Save quality control information. 46
3.3.1.4 1.2.1.4 Send the raw material to the warehouse 46
3.3.2 1.2.2 Manufacturing 46
3.3.2.1 1.2.2.1 Check Job Orders And Technical Images 48
3.3.2.2 1.2.2.2 Make Programming 48
3.3.2.3 1.2.2.3 Prepare Machine 48
3.3.2.4 1.2.2.4 Start Manufacturing 48
3.3.2.5 1.2.2.5 Check First Part 48
3.3.2.6 1.2.2.6 Continue Manufacturing 48
3.3.2.7 1.2.2.7 Fill Waste Information Form 48
3.3.2.8 1.2.2.8 Send Waste 48
3.3.2.9 1.2.2.9 Fill Production Control Form 48
3.3.2.10 1.2.2.10 Send Pieces To Leveling 48
3.3.3 1.2.3 Leveling 48
3.3.3.1 1.2.3.1 Check Job Order And Technical Image. 51
3.3.3.2 1.2.3.2 Select Appropriate Machine 51
3.3.3.3 1.2.3.3 Perform the Leveling Process. 51
3.3.3.4 1.2.3.4 Create Levelling Report 51

3.4 1.3 Quality 51
3.4.1 1.3.1 Acceptance and First Control 54
3.4.1.1 1.3.1.1 Check Job Orders And Technical Images 55
3.4.1.2 1.3.1.2 Make Programming 55
3.4.2 1.3.2 Quality and Control 55
3.4.2.1 1.3.2.1 Prepare Machine 57
3.4.2.2 1.3.2.2 Make Control Process 57
3.4.2.3 1.3.2.3 Fill Quality / Control Form 57
3.4.2.4 1.3.2.4 Send Products to Depot 57
3.5 1.4 Storage And Delivery 57
3.5.1 1.4.1 Storage 59
3.5.1.1 1.4.1.1 Check Job Order and Quality / Control Form 60
3.5.1.2 1.4.1.2 Pack Product 60
3.5.1.3 1.4.1.3 Place Products 60
3.5.1.4 1.4.1.4 Check Stock 60
3.5.1.5 1.4.1.5 Send Products 60
3.5.1.6 1.4.1.6 Update Inventory 60
3.5.2 1.4.2 Delivery 60
3.5.2.1 1.4.2.1 Check Job Orders And Stock Form 62
3.5.2.2 1.4.2.2 Prepare Shipment List 62
3.5.2.3 1.4.2.3 Take Delivery Note 62
3.5.2.4 1.4.2.4 Make Delivery 62
3.5.2.5 1.4.2.5 Save The Shipment Information To ERP 62
3.6 Technology Readiness Levels (TRL) 62
3.7 Cost 70
CHAPTER 4- CONCLUSION 83

REFERENCES 87

CURRICULUM VITAE 92

LIST OF TABLES

Table 2. 1 Labor Productivity In The Production of Cotton Yarn [13]……..19
Table 3. 1 Technology Readiness Levels Metrics 63
Table 3. 2 ABC's Business Management System 63
Table 3. 3 1.1 Management 64
Table 3. 4 1.1.1 Management 64
Table 3. 5 1.1.2 Accounting 65
Table 3. 6 1.1.3 Purchasing 65
Table 3. 7 1.1.4 Production Planning 66
Table 3. 8 1.1.5 Quality Management 66
Table 3. 9 1.2 Manufacturing 66
Table 3. 10 1.2.1 Raw Material Quality Control 67
Table 3. 11 1.2.2 Manufacturing 67
Table 3. 12 1.2.3 Leveling 68
Table 3. 13 1.3 Quality 68
Table 3. 14 1.3.1 Acceptance And First Control 68
Table 3. 15 1.3.2 Quality and Control 69
Table 3. 16 1.4 Storage and Delivery 69
Table 3. 17 1.4.1 Storage 69
Table 3. 18 1.4.2 Delivery 70
Table 3. 19 1.0 ABC' s Business Management System 72
Table 3. 20 1.1 Management 73
Table 3. 21 1.1.1 Management 74
Table 3. 22 1.1.2 Accounting 74
Table 3. 23 1.1.3 Purchasing 75
Table 3. 24 1.1.4 Production Planning 75
Table 3. 25 1.1.5 Quality Management 76
Table 3. 26 1.2 Manufacturing 76
Table 3. 27 1.2.1 Raw Material Quality Control 77
Table 3. 28 1.2.2 Manufacturing 77
Table 3. 29 1.2.3 Leveling 78
Table 3. 30 1.3 Quality 78

Table 3. 31 1.3.1 Acceptance And First Control 79
Table 3. 32 1.3.2 Quality and Control 79
Table 3. 33 1.4 Storage and Delivery 80
Table 3. 34 1.4.1 Storage 80
Table 3. 35 1.4.2 Delivery 81
Table 3. 36 Summary table of ABC Company 82

LIST OF FIGURES

Figure 2.1 The Four stages of the Industrial Revolution[1] 6
Figure 2.2 Industry 4.0 [43] 8
Figure 2.3 Industry 4.0 Requires Comprehensive Digitization Of The Horizontal And Vertical Chains [4] 11
Figure 2.4 The Systems Engineering Process [15] 13
Figure 2.5 Diagram Shows The Elements Of A System [27] 15
Figure 2.6 System Functional Breakdown [20] 17
Figure 2.7 TRL-Inspired Readiness Scales [32] 19
Figure 2.8 Cost Breakdown Structure (CBS) [20] 22
Figure 2.9 Description Of Cost Categories (Partial) [20] 23
Figure 2.10 Description Of Cost Categories (Continued) [20] 24
Figure 3.1 1.0 ABC' s Business Management System 28
Figure 3.2 1.1 Management 30
Figure 3.3 1.1.1 Management 32
Figure 3.4 1.1.2 Accounting 34
Figure 3.5 1.1.3 Purchasing 36
Figure 3.6 1.1.4 Production Planning 38
Figure 3.7 1.1.5 Quality Management 40
Figure 3.8 4 Axis CNC Lathe 41
Figure 3.9 CNC Vertical Milling Cutter 42
Figure 3.10 5-Axis CNC Vertical Machining Center 42
Figure 3.11 1.2 Manufacturing 43
Figure 3.12 1.2.1 Raw Material Quality Control 45
Figure 3.13 1.2.2 Manufacturing 47
Figure 3.14 Vibrating Deburring 49
Figure 3.15 Vibrating Dryer 49
Figure 3.16 1.2.3 Leveling 50
Figure 3.17 CMM 51
Figure 3.18 Profile Projector 52
Figure 3.19 1.3 Quality 53
Figure 3.20 1.3.1 Acceptance and First Control 54

Figure 3.21 1.3.2 Quality and Control 56
Figure 3.22 1.4 Storage And Delivery 58
Figure 3.23 1.4.1 Storage 59
Figure 3.24 1.4.2 Delivery 61

CHAPTER 1

INTRODUCTION

“The concept of the Industrial 4.0 emerged in Germany and began to gain importance in our country. In order to keep pace with the developing technology, it is important that manufacturing companies comply with Industry 4.0. In Industry 4.0, dynamic business and engineering processes enable last-minute changes to production and deliver the ability to respond flexibly to disruptions and failures on behalf of suppliers, for example.” [1]

“Digitally developed smart machines, warehousing systems and production facilities enable end-to-end information and communication systems-based integration across the supply chain from inbound logistics to production, marketing, outbound logistics and service.” [2]

“As the fourth industrial revolution, it has taken on the name Industry 4.0, in keeping with the way new versions or releases of software are usually designated.” [3] The Industrial Internet is on the agenda of many companies. [4]

This thesis is based on two purposes. Firstly, to determine the technology maturity level of the ABC company in the transition to the Industry 4.0 process, and secondly to digitize the system by making optimization. In the transition to Industry 4.0, the existing system needs to be analyzed first. Appropriate improvements should then be made wherever necessary in the system. For this purpose, the name of a company that made production due to commercial transparency is named as ABC. This case was worked on the real factory in Ostim and the data were collected.

ABC company was established in 2002 in Ostim / Ankara with 700 m^2 closed area. For 11 years, this company has been working as a parts manufacturing company for defense industry, agricultural tools, medical devices and other sectors. Since its inception, ABC has focused on sectoral production and has developed its infrastructure for this purpose and trained its technical personnel. This company constantly renews

its technological infrastructure to provide the best service to its customers operating in Turkey and abroad. It is one of the most technologically advanced companies in Ostim. Even considering the slightest vibrations, the company makes the most of the mistakes by reducing the production.

Quality, reliability, developing technological adaptation and customer satisfaction as unchangeable items with all employees to work with the company, ISO 9001: 2008 Quality Management System Certificate has been documented.

In addition, the company, which has ISO 14001 and OHSAS 18001 Quality Certificates, continues to work with ÇİSK (Environment, Occupational Health and Safety Quality) management system by establishing an integrated system.

The main objectives of the company are to comply with the applicable legislation, to pollute the environment, to use the natural resources at the optimum level, to determine the risks and eliminate them at the source or to bring them down to the minimum level, to implement the business safety without compromise, to develop the employees with trainings and improve the competitiveness and development power in machining and mechanic assembly by planning and realizing the studies for improvement and researching and developing and realizing customer satisfaction and loyalty by realizing timely production and service. To be a reliable and leading company in domestic and abroad for machining and mechanical assembly for the defense industry. Being an innovative and continuously developing company in harmony with developing technology, they are always providing new, affordable, quality, reliable products and services to its customers with its knowledge and experience.

The ABC company can produce with the existing production infrastructure and developing equipment technology with the production of the parts with the desired variety size and precise tolerance. The ABC company constantly renews itself in the field of production to provide the best service to its customers with its highly experienced and dynamic technical staff. It provides the best service to its customers with the breakthroughs that it has made technologically and with the new equipment reinforcement.

The ABC company provides the mechanic assembly of the parts produced in the body to be converted into a mechanical system. During these applications, the level of education applies an error-free assembly process with highly experienced technical personnel. Then the related product comes out of the ABC company is delivered to the customer.

In order to meet the high standards of the products produced by ABC company, the products which are manufactured firstly are checked with their own latest technology and high precision measurement equipment to check whether they meet the desired level. The company has the equipment support and measurement equipment and tests of all kinds of products from small size pieces to large size pieces. All these measurement and control procedures are successfully implemented within the production network.

ABC's business management systems were examined for 8 months. In the process of transformation to Industry 4.0, user requirements have been identified for The ABC Company with the help of Structured Systems Analysis and Design Method, SSADM. In this thesis, SSADM, which is a kind of functional flow block diagrams, is used. It has been examined to the level of the user's requirement in order to determine the points where digitalization is necessary. With SSADM, the jobs that can be optimized in the industry 4.0 transition process are identified and the level of technology maturity at each level is explained. Both the cost and the nonparametric values specific to this study were used in the system. The cost of each user's requirement is calculated. As a result, when the system is digitized, the cost exchange can be determined. Further information on the method is included in the thesis.

CHAPTER 2

LITERATURE REVIEW

This thesis is structured in seven chapters. After this introduction, chapter 2.1 you'll find Industry 4.0 history and basics. In chapter 2.2 the System and Systems Engineering is explained. Chapter 2.3 presents Structured System Analysis and Design Method (SSADM). In chapter 2.4 a brief Technology Readiness Levels (TRL) can be found. Chapter 2.5 presents Cost breakdown structure of company.

2.1 Industry 4.0

"The first industrial revolution begins began at the end of the 18th century and was represented by mechanical production plants based on water and steam power; the second industrial revolution starts started at the beginning of the 20th century with the symbol of mass labor production based on electrical energy; the third industrial revolution begins began in the 1970s with the characteristic of automatic production based on electronics and internet technology; and right now, the fourth industrial revolution, namely Industry 4.0, is ongoing, with the characteristics of cyber physical systems (CPS) production, based on heterogeneous data and knowledge integration." [5]

The Industry 4.0 concept is based on production tools, intelligent communication chains based on people and components and communication tools. The concept of Industry 4.0 is a brainchild established in Germany. [6]

"Smart industry or "INDUSTRIE 4.0" refers to the technological evolution from embedded systems to cyber-physical systems.[11] With recent developments that have resulted in higher availability and affordability of sensors, data acquisition systems and computer networks, the competitive nature of today's industry forces more factories to move toward implementing high-tech methodologies." [7]

With the introduction of the Internet of Things and Services, the 4th industrial revolution began. In the years to come, firms will have global networks that combine

companies' machines, storage systems and production facilities in the form of Cyber-Physical Systems (CPS). Industry 4.0 has great potential. Companies that work with intelligent machines can meet customer requests and even produce one-off products profitably. ndustry 4.0 makes changes possible for problems encountered in business and engineering processes and provides the ability to respond quickly. The fact that every process is open allows for an optimized decision in the production process. With Industry 4.0 new business lines will be created. In addition, Industry 4.0 will be able to address and solve some of the challenges that may arise. [1]

“With Industrie 4.0 becoming a top priority for many research centers, universities, and companies, the manifold contributions from academics and practitioners have made the meaning of the term more blurry than concrete. Even the key promoters of the idea, the “Industrie 4.0 Working Group” and the “Platform Industrie 4.0”, only describe the vision, the basic technologies the idea aims at, and selected scenarios, but do not provide a clear definition. As a result, a generally accepted understanding of Industrie 4.0 has not been published so far. This impedes scientific research as any theoretical study requires a sound conceptual and terminological foundation.” [29]

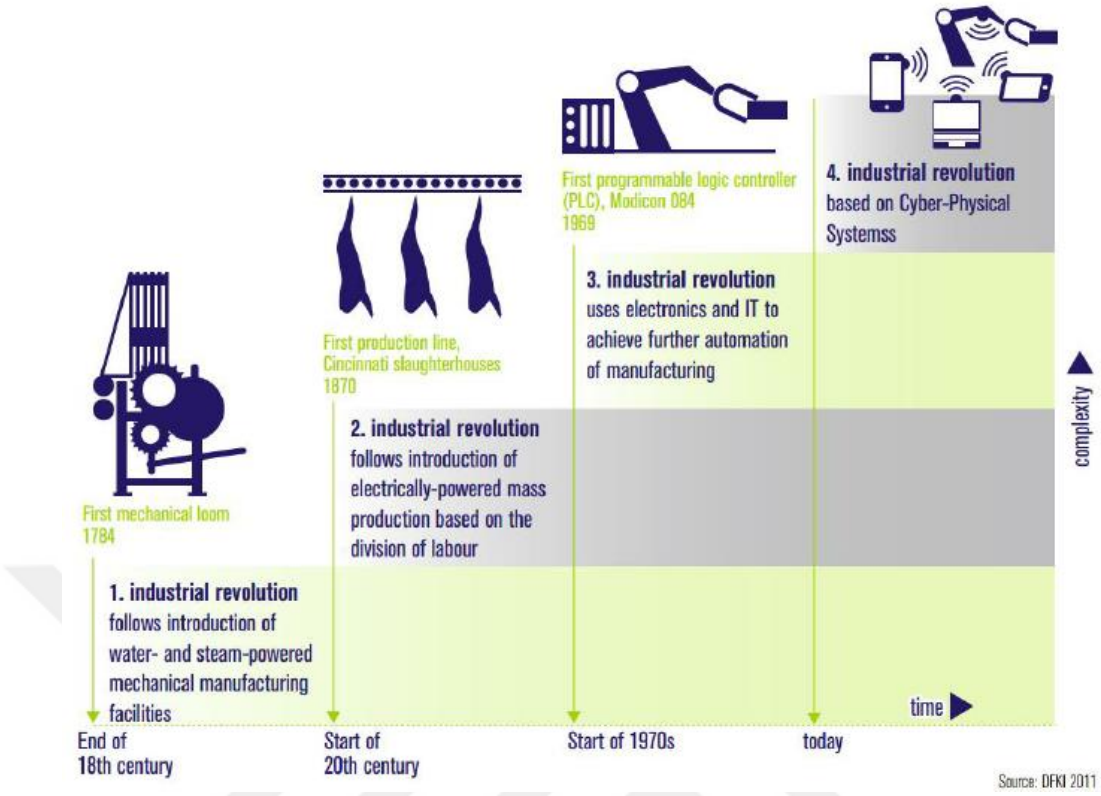

Figure 2.1 The Four Stages Of The Industrial Revolution[1]

"Universality in industrial applications: Internet of Things, Internet of Services, Internet of Media, big data, communications inter-machines and cyber-physical systems using interoperability, decentralization and full virtualization certainly will affect different course of many phenomena than is apparent from past experience." [6]

Industry 4.0 is based on 9 basic principals. [12]

2.1.1 The Industrial Internet of Things

"The term IoT was firstly proposed by Kevin Ashton in MIT Auto- ID in 1999, he emphasized using the IoT to mark the characteris- tics of objects and defined IoT only based on RFID technology to realize the interconnection of objects. Melon Steven in SUN considered that the IoT is using RFID electronic tag to make the computers automatically identify common objects and then track- ing, monitoring, and managing. The formal IoT concept was given by ITU in WSIS in 2005 as realizing people and things' in- teraction in any time and any place by embedding short-distance mobile

transceivers into parts and daily objects. In ‘Internet of Things in 2020’ European Union came forward that IoT is a network consisting of objects with label or virtual character, where the label and personality are stored in smart space using intelligent interface to communicate with users, society and environment. The CEO of IBM ales used his definition of IoT to describe the Smarter Planet plan. Till now there is no accepted or standard definition for IoT. A relatively convincing definition of IoT focuses not only on object identification and interconnection but also on the role of communication network.” [14]

With the Internet of Objects and Services, the entire plant will be a smart environment. Digitally developed intelligent machines enable integration based on end-to-end information and communication systems throughout the supply chain. Industry 4.0 additionally provides better co-operation between employees and employers. [2]

With Industry 4.0, an interconnected global supply chain can be created. As a negative aspect of Industrial Internet, cyber attacks is increased the threat.

2.1.2. Simulation

Simulations can be used today, as well as in the process before production, while reflecting the physical model. With industry 4.0, the "test-and-optimize" process can be applied when simulating in the future. [10]

“SIMULATION is a representation of the functioning of a system or process. Through simulation, a model may be implanted with unlimited variations, producing complex scenarios. These capabilities allow analysis and understanding of how individual elements interact and affect the simulated environment.” [22]

- “Live Simulations - Real people operate in the real world.” [22]
- “Virtual Simulations - Real people operate in synthetic worlds.” [22]
- “Constructive Simulations - Simulated entities operate in synthetic worlds.” [22]
- “Undefined Simulations - Simulated entities are subjected to real world environments.” [22]

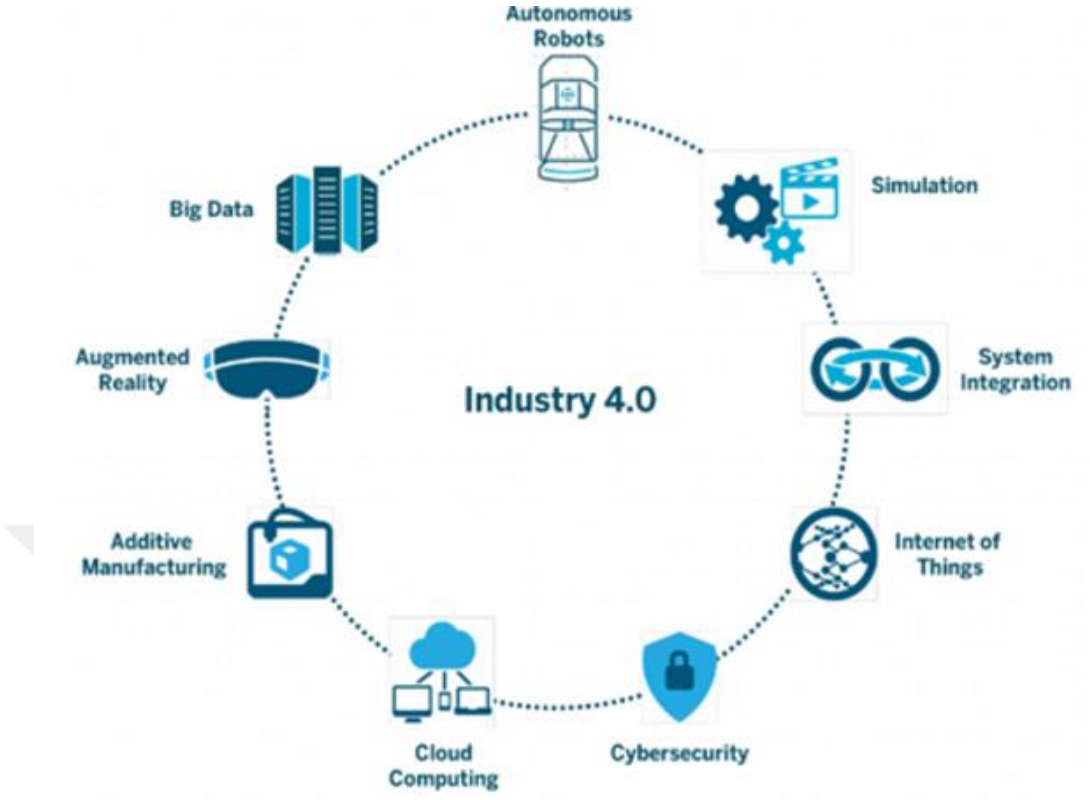

Figure 2.2 Industry 4.0[12]

2.1.3 Additive Manufacturing

"Additive manufacturing is a suite of emerging technologies that fabricates three-dimensional objects directly from digital models through an additive process, typically by depositing and "curing in place" successive layers of polymers, ceramics, or metals." [17]

"Additive manufacturing processes take the information from a computer-aided design (CAD) file that is later converted to a stereolithography (STL) file. In this process, the drawing made in the CAD software is approximated by triangles and sliced containing the information of each layer that is going to be printed. There is a discussion of the relevant additive manufacturing processes and their applications. The aerospace industry employs them because of the possibility of manufacturing lighter structures to reduce weight. Additive manufacturing is transforming the practice of medicine and making work easier for architects. In 2004, the Society of Manufacturing Engineers

did a classification of the various technologies and there are at least four additional significant technologies in 2012. Studies are reviewed which were about the strength of products made in additive manufacturing processes. However, there is still a lot of work and research to be accomplished before additive manufacturing technologies become standard in the manufacturing industry because not every commonly used manufacturing material can be handled. The accuracy needs improvement to eliminate the necessity of a finishing process. The continuous and increasing growth experienced since the early days and the successful results up to the present time allow for optimism that additive manufacturing has a significant place in the future of manufacturing." [31]

In modern production systems, additive manufacturing (AM) machines are used for reasons such as digitization, automation, flexibility and personalization. [18]

2.1.4 Autonomous Robots

"Autonomous robots, just like humans, also have the ability to make their own decisions and then perform an action accordingly. A truly autonomous robot is one that can perceive its environment, make decisions based on what it perceives and/or has been programmed to recognize and then actuate a movement or manipulation within that environment. With respect to mobility, for example, these decision-based actions include but are not limited to the following basics: starting, stopping, and maneuvering around obstacles that are in their way. For a robot, perception means sensors. Laser scanners, stereo vision cameras (eyes), bump sensors (skin and hair), force-torque sensors (muscle strain), and even spectrometers (smell) are used as input devices for a robot. And with both people and robots alike, we can now think of other kinds of information inputs, like the endless supply of data from the internet; in fact one might think of the internet of things as an endless sea of sensors with very long wires reaching back to the robots that might use them." [27]

Autonomous robots are becoming more autonomous, flexible and collaborative. In the end, they will be able to interact with each other and play safely with people side by side. And they will learn from people. [9]

2.1.5 The Cloud

"Cloud-based manufacturing (CBM) is another rising paradigm that will contribute significantly to the success of Industry 4.0. CBM can be described as a networked manufacturing model that exploits on-demand access to a shared collection of diversified and distributed manufacturing resources to form temporary, reconfigurable cyber-physical production lines which enhance efficiency, reduce product lifecycle costs, and allow for optimal resource allocation in response to variable-demand customer generated tasking. Characteristics of CBM include networked manufacturing, scalability, agility, ubiquitous access, multi-tenancy and virtualization, big data and the IoT, everything-as-a-service (e.g., infrastructure-as-a-service, platform-as-a-service, hardware-as-a-service, and software-as-a-service), scalability, and resource pooling." [16]

"Generally, companies a more inclined to focus on their core-business by favoring the use of standard, open and user-friendly platforms. The choice is a strategic one for any company looking to invest their resources in the most appropriate way possible while containing initial costs and managing return on investment (ROI) on an average to long term basis. As data is managed it soon becomes apparent how essential data management is for strategic business projects to evolve and expand. The ideal solution is to choose a standard platform, one that can ensure choosing between IIoT protocol or other industrial protocols, and one that is modular and expandable offering all the features necessary to create not just data collection systems but also business intelligence, process management, alarm management and the remote control of a supervisory system." [40]

2.1.6 Horizontal and Vertical System Integration

"Industry 4.0 would enable overall integration – companies, departments, functions etc. As the data would be on cloud, it will be real time and available for every department to access." [12]

"Legacy information systems are usually tailored to support particular business functions, such as payroll or purchasing, and are as a consequence usually difficult to

integrate. However, companies of today strive to streamline their business processes (intra- as well as inter-organizational). This gives rise to a strong need for much better integration of systems (existing as well as new in-house developed systems or packaged ERP solutions) across functional boundaries and in line with the business processes." [37]

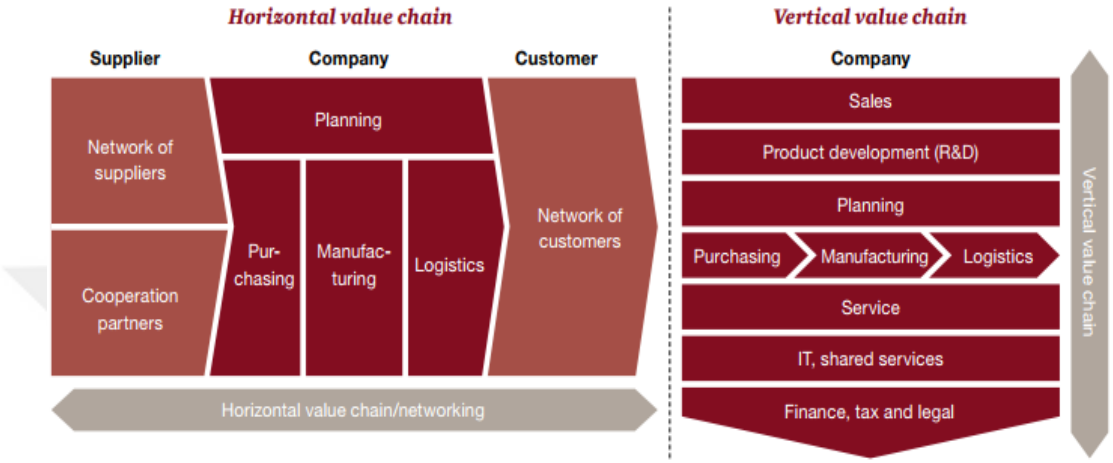

Figure 2.3 Industry 4.0 Requires Comprehensive Digitization Of The Horizontal And Vertical Chains[4]

2.1.7 Augmented Reality

"Augmented Reality (hereafter, AR) makes reference to the real-time perception of an environmental setting that has been enhanced by means of computer-generated virtual components. (Augmented reality: An ecological blend) AR technology has three significant contributions: (1) the real scene and virtual 3D objects are combined together, (2) the virtual 3D objects can be occurred in the real scene by registration and (3) the virtual 3D objects can be controlled in real-time." [19]

Based on the articles on Augmented Reality, 3 main strategies have been identified. [36]

1. "Augment the user The user wears or carries a device, usually on the head or hands, to obtain information about physical objects." [36]

2. "Augment the physical object The physical object is changed by embedding input,

output or computational devices on or within it.”

3. “Augment the environment surrounding the user and the object Neither the user nor the object is affected directly. Instead, independent devices provide and collect information from the surrounding environment, displaying information onto objects and capturing information about the user's interactions with them.” [36]

2.2 System And Systems Engineering

“System engineering is performed in the context of a particular organizational structure and culture, and so the discipline has always had to be attuned to and aligned with the realities of organizations and their cultures.” [23]

“The International Council on Systems Engineering (INCOSE) defines it as follows:” [39]

System engineering is an interdisciplinary approach. In other words, it focuses on defining customer needs and designing and system validation considering the problems in the following process. System engineering aims to produce quality products considering all requests of customers. [39]

The system engineering approach was used in this paper and The ABC Company's business management system was analyzed as a whole.

More specifically:

“The systems engineering process shall:” [20]

1. “Transform approved operational needs and requirements into an integrated system design solution through concurrent consideration of all life-cycle needs (i.e., development, manufacturing, test and evaluation, deployment, operations, support, training, and disposal), and
2. Ensure the interoperability and integration of all operational, functional, and physical interfaces. Ensure that system definition and design reflect the requirements for all system elements to include hardware, software, facilities, people, and data, and

3. Characterize and manage technical risks.” [20]

“Systems engineering, widely used in manufacturing and aviation, is an interdisciplinary approach to analyze, design, manage, and measure a complex system in order to improve its efficiency, reliability, productivity, quality, and safety.” [24]

“A system is developed to accomplish a specific function, or a series of functions, with the objective of responding to some identified need. Most systems are complicated series of large numbers of expensive components.” [41]

“Systems Engineering is an engineering discipline whose responsibility is creating and executing an interdisciplinary process to ensure that the customer and stakeholder's needs are satisfied in a high quality, trustworthy, cost efficient and schedule compliant manner throughout a system's entire life cycle. This process is usually comprised of the following seven tasks: State the problem, Investigate alternatives, Model the system, Integrate, Launch the system, Assess performance, and Re-evaluate. These functions can be summarized with the acronym SIMILAR: State, Investigate, Model, I ntegrate, Launch, Assess and Re-evaluate. This Systems Engineering Process is shown in Figure 4. It is important to note that the Systems Engineering Process is not sequential. The functions are performed in a parallel and iterative manner.” [15]

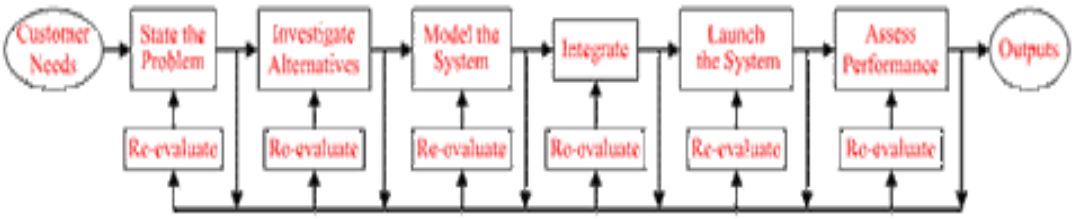

Figure 2.4 The Systems Engineering Process[15]

System engineering is an integrated theory to optimize the parts in the system. System engineering also refers to non-technical applications in addition to technically looking at the system. According to Senge, another concept of system thinking is "the system is a discipline to see thought, wholesalers. It is a framework for seeing mutually exclusive relationships from things to see change patterns instead of static "snapshots".

"The system can have different purposes in mind. For example, it is like designing a system, restructuring business processes, managing the organization, determining the system tools. [8]

“Shows the elements of a system: [27]

Outputs and Inputs

- The main aim of a system is to produce an output which is useful for its user.
- Inputs are the information that enters into the system for processing.
- Output is the outcome of processing.

Processor(s)

- The processor is the element of a system that involves the actual transformation of input into output.
- It is the operational component of a system. Processors may modify the input either totally or partially, depending on the output specification.
- As the output specifications change, so does the processing. In some cases, input is also modified to enable the processor for handling the transformation.

Control

- The control element guides the system.
- It is the decision–making subsystem that controls the pattern of activities governing input, processing, and output.
- The behavior of a computer System is controlled by the Operating System and software. In order to keep system in balance, what and how much input is needed is determined by Output Specifications.

Feedback

- Feedback provides the control in a dynamic system.
- Positive feedback is routine in nature that encourages the performance of the system.

- Negative feedback is informational in nature that provides the controller with information for action.

Environment

- The environment is the “supersystem” within which an organization operates.
- It is the source of external elements that strike on the system.
- It determines how a system must function. For example, vendors and competitors of organization’s environment, may provide constraints that affect the actual performance of the business.

Boundaries and Interface

- A system should be defined by its boundaries. Boundaries are the limits that identify its components, processes, and interrelationship when it interfaces with another system.
- Each system has boundaries that determine its sphere of influence and control.
- The knowledge of the boundaries of a given system is crucial in determining the nature of its interface with other systems for successful design.”

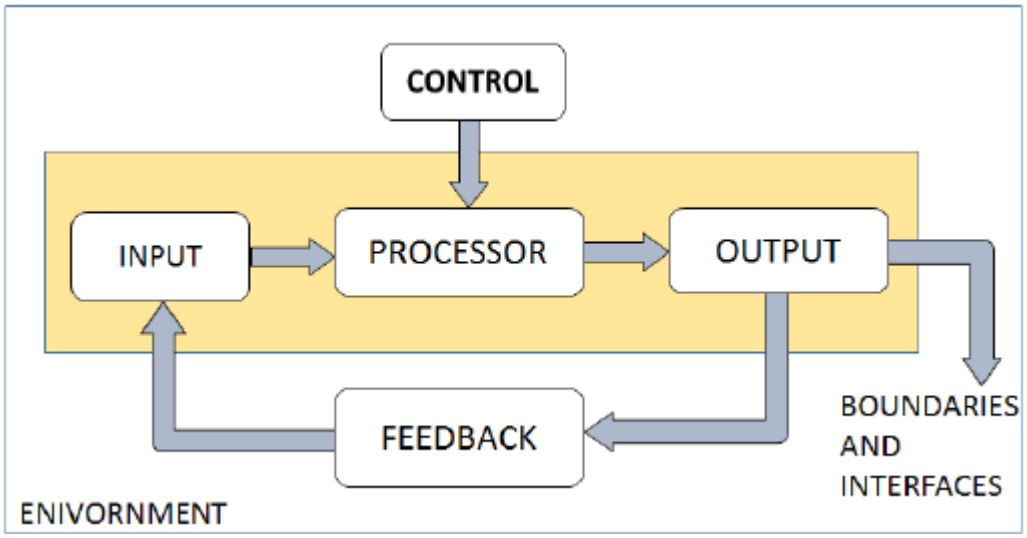

Figure 2.5 Diagram Shows The Elements Of A System[27]

System methodology consists of a piece. These include methods, tools, procedures, processes and practices that leaders and employees can work together as a whole. [21]

2.3 Functional Flow Block Diagrams (FFBDs)

According to Blanchard [20], in the development of functional-flow diagrams, some degree of standardization is necessary, for the purpose of communication, in defining the system. Thus, certain basic practices and symbols should be used, whenever possible, in the physical layout of functional diagrams. Thus, certain basic practice sand symbols should be used, whenever possible, in the physical layout of functional diagrams. The following eight guidelines should help:

1. Function block. Each separate function in a functional diagram should be presented in a single box enclosed by a solid line.
2. Function numbering. Functions identified on the functional-flow diagrams at each level should be numbered in a manner that preserves the continuity of functions and provides information with respect to function origin throughout the system.
3. Functional reference. Each functional diagram should contain a reference to its next higher functional diagram through the use of a reference block.
4. Flow connection. Lines connecting functions should indicate only the functional flow and should not represent either a lapse in time or any intermediate activity.
5. Flow direction. Functional diagrams should be laid out so that the functional flow is generally from left to right, and the reverse flow, in the case of a feedback functional loop, from right to left
6. Summing gates. A circle should be used to depict a summing gate. As in the case of functional blocks, lines should enter and/or exit the summing gate as appropriate.
7. Go and no-go paths. The symbols G and G are used to indicate go and no-go paths, respectively.
8. Numbering procedure for changes to functional diagrams. Additions of functions to existing data should be accomplished by locating a new function in its correct position without regard to sequence of numbering

Functional analysis, functional-flow block diagrams and system flow are observed. Block diagrams are created to show system requirements. Block diagrams are created to show the systematic organization and to describe the parts in the system in detail. It allows the functional analysis, design, development and system identification process to be developed in a comprehensive manner. All levels in the system are defined, and depths are created to the extent necessary for the purposes of the definition. [20]

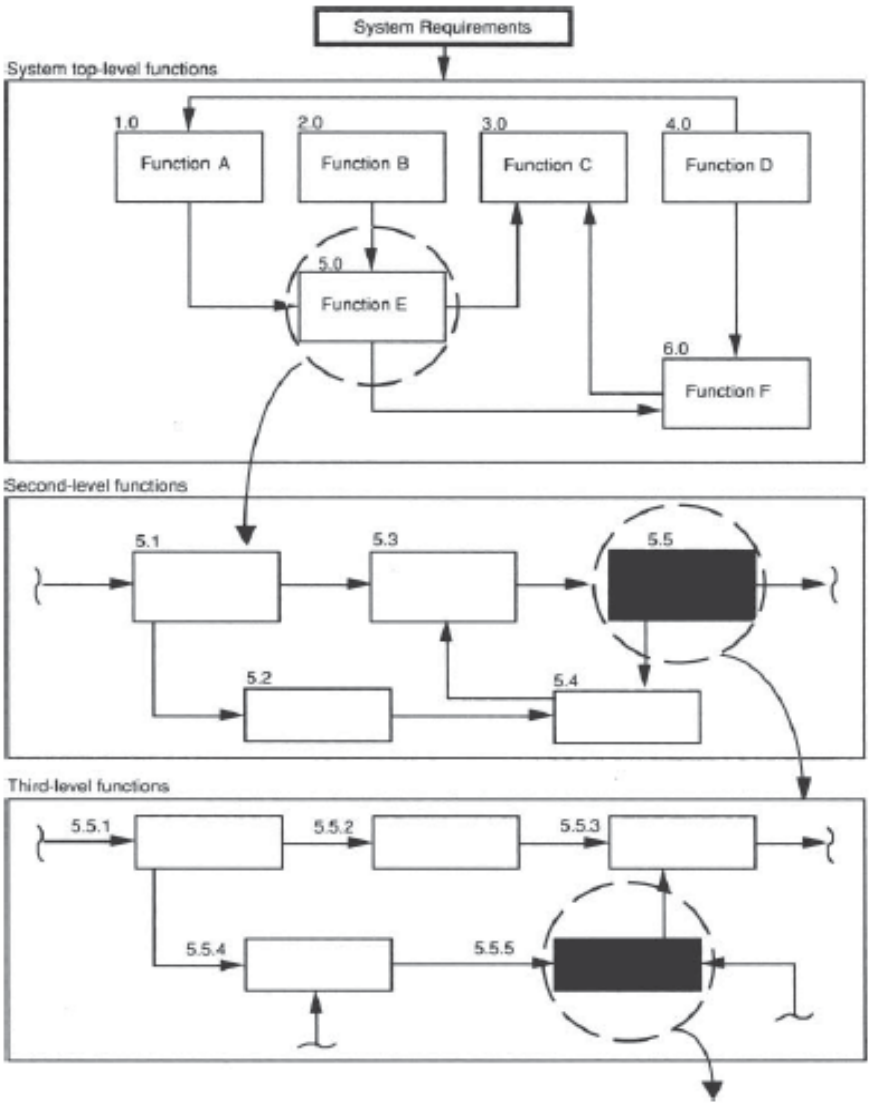

Figure 2.6 System Functional Breakdown[20]

“In this article, SSADM, which is a kind of (FFBDs), is used. The structured system analysis and design method (SSADM), originally launched in 1981, which consists of

five modules and is the official analysis method for system development in the UK.” [25]

“It was made the mandatory standard for central government systems analysis and design in 1983, and in 1987, in the form of version 3, it was made publicly available and non-proprietary. Version 4 SSADM was launched in 1990.” [26]

The systematic analysis is done to examine the parts of the system that define the system.

“Compared to construction, software industry is relatively a new industry, yet significant efforts have been directed towards standardization leading to the development of several information systems methodologies supported by numerous standard techniques each addressing different aspects of the development.” [43]

SSADM shows data flows in the system using diagrams. In the description of the model, a method explaining all the processes from top to bottom is used. One of the positive aspects of SSADM is that it supports "non-functional requirements". These requirements enable the system to be improved and the quality level to be increased. [30]

2.4 Technology Readiness Levels (TRL)

Technology Readiness Levels (TRL) is a type of measurement system used to determine the level of maturity of the technology that the system has. Each project where tkology is used is evaluated according to the parameters for the technology level and the TRL value is given according to the progress of the project. [35]

“Originated by NASA in 1970s, Technology Readiness Level (TRL) is a 1-to-9 measurement scale used to describe the maturity of new technologies under development. It helps monitor and adapt their progress route towards larger system integration and/or market launch. This enables a better execution in terms of project performance, schedule and budget. The scale is appreciated for its ability to improve risk management, resource allocation, and project coordination. Therefore, TRLs and TRL-inspired readiness scales are increasingly utilized by engineers, scientists,

innovators, investors, granters, purchasers, international organizations, and governments in many countries.” [32]



Figure 2.7 TRL-Inspired Readiness Scales[32]

“Technology development is the process of developing and demonstrating new or unproven technology, the application of existing technology to new or different uses, or the combination of existing and proven technology to achieve a specific goal. Technology development associated with a specific acquisition project must be identified early in the project life cycle and its maturity level should have evolved to a confidence level that allows the project to establish a credible technical scope, schedule and cost baseline.” [44]

It is seen in the table that the effect of technological developments on labor productivity has changed with the technological development of cotton yarn production made in India. [13]

Table 2.1 Labor Productivity In The Production Of Cotton Yarn[13]

Indian manual worker (18yy.)	50.000 Ohp
Crompton's machine (1780)	2.000 Ohp
100 spindle machine (1790)	1.000 Ohp
The first machine bench (1795)	300 Ohp
Robert's automatic counter (1825)	135 Ohp
Modern workbench (1972)	40 Ohp
Ohp= Processing time of a hundred pounds of cotton	

2.5 Cost

Functions can be divided into subfunctions, work caches, work packages, and even physical elements by performing functional analysis. For planning and management, all costs must be collected from the first level. For a standard project, a work breakdown structure (WBS) is used to show in a hierarchical way all the work required to complete a particular program. A cost breakdown structure is intended to show that all functions have the necessary depth to make them conform to the configuration. That is, the A cost breakdown structure will lead to a design that can be used to distribute the costs downwards in the design phase, and then determine the processes needed to create a product upwards from the bottom. As a result of these processes, the necessary cost analysis for a life cycle will be possible. A cost breakdown structure is a tool for determining all the costs in the system. With this tool, the costs of the functions, processes and / or elements that make up the system can be determined. [20]

“This technique has gained increasing importance in early planning and concept formulation of many military acquisition processes. It is being thought of as the cornerstone in many capital investment decisions.” [28]

“The overall purpose of the CBS is to breakdown all the associated costs for purposes of identification and control. Costs are allocated to the lowest level of the WBS. The tasks at this level can often be subdivided into discrete activities to be completed by different departments therefore one task may have several costs elements. Once costs have been assigned to tasks, it is possible to monitor the project in terms of actual, forecast and earned cost on a task. In order to be able to summarise costs within projects across projects a CBS needs to be developed. The majority of organisations have a standard CBS that is applied across all projects and is nearly always determined by the finance department. Finance often refers to the structure as the code of accounts which includes other elements over and above pure costs. With some computerised tools, a separate CBS is set up which is normally a simplified version of the code of accounts so that it can be understood more easily by non-financial managers.” [38]

“In a way, this cost breakdown structure (CBS) links objectives and activities with resources and constitutes a logical subdivision of cost by functional activity, area, major element of a system, and/or more discrete classes of common items.” [31]

“The manufacturing process cost of a part is dependent on factors such as necessary equipment and installation, required tools, the time for processing and the operating procedures.” [34]

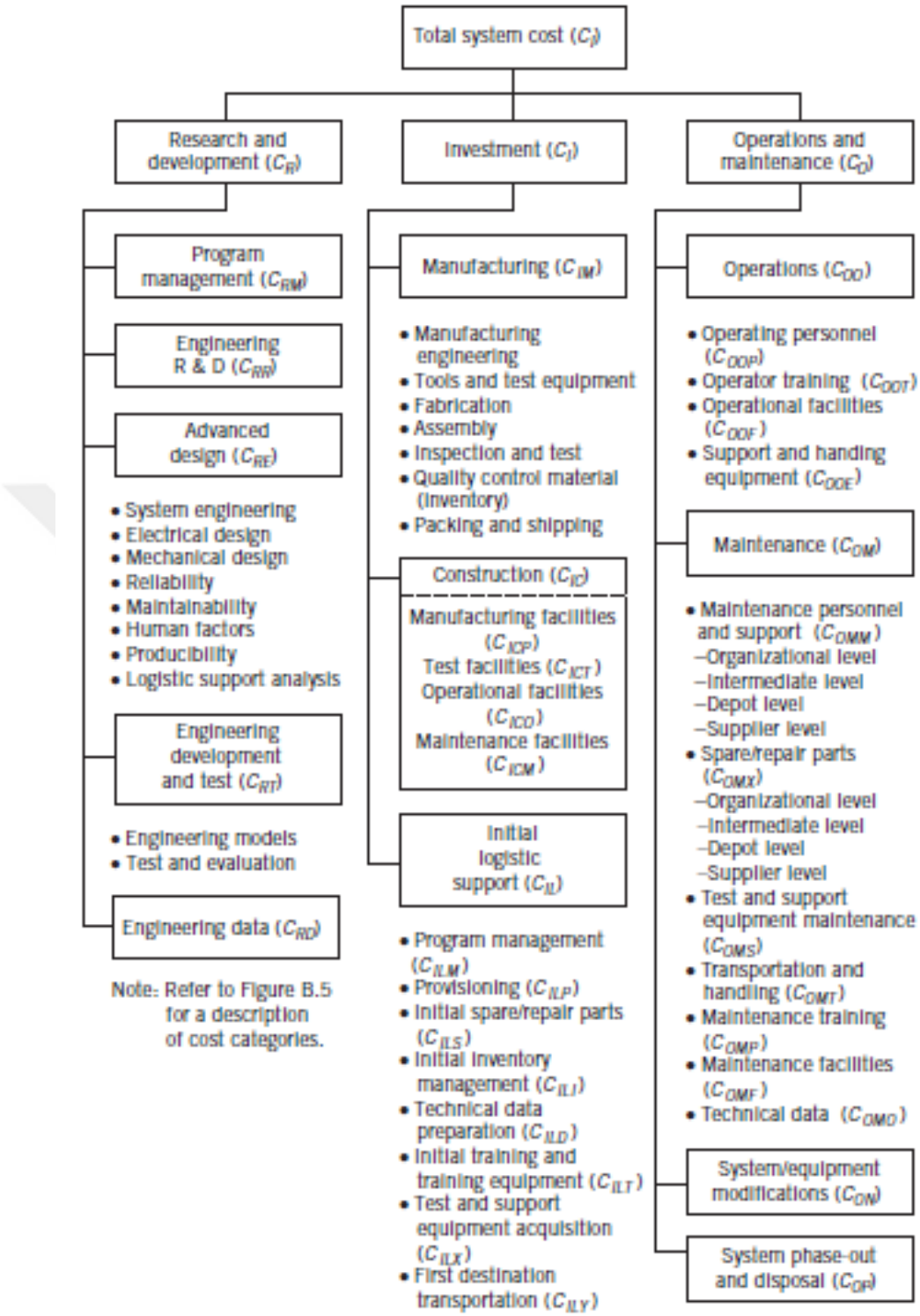

Figure 2.8 Cost Breakdown Strucuture (CBS)[20]

Cost Category (Figure B.4)	Method of Determination (Quantitive Expression)	Cost Category Description and Justification
Total system cost (C)	$C = C_R + C_I + C_O$ C_R – R and D cost C_I – Investment cost C_O – Operations and maintenance cost	Includes all future costs associated with the acquisition, utilization, and subsequent disposal of system/equipment.
Research and development (C_R)	$CR = C_{RM} + C_{RR} + C_{RE} + C_{RT} + C_{RD}$ C_{RM} – Program management cost C_{RR} – Advanced R&D cost C_{RE} – Engineering design cost C_{RT} – Equipment development/ test cost C_{RD} – Engineering data cost	Includes all costs associated with conceptual/feasibility studies, basic research, advanced research and development, engineering design, fabrication and test of engineering prototype models (hardware) and associated documentation. Also covers all related program management functions. These cost are basically nonrecurring.
Investment (C_I)	$C_I = C_{IM} + C_{IC} + C_{IL}$ C_{IM} – System/equipment manufacturing cost C_{IC} – System construction cost C_{IL} – Cost of initial logistic support	Includes all costs associated with the acquisition of systems/ equipment (once design and development have been completed). Specifically, this covers manufacturing (recurring and nonrecurring), manufacture-ing management, system construction, and initial logistic support.
Operations and maintenance (C_O)	$C_O = C_{OO} + C_{OM} + C_{ON} + C_{OP}$ C_{OO} – Cost of system/equipment life-cycle operations C_{OM} – Cost of system/equipment life-cycle maintenance C_{ON} – Cost of system/equipment life-cycle modifications C_{OP} – Cost of system/equipment phase-out and disposal	Includes all costs associated with the operation and maintenance support of the system throughout its life cycle subsequent to equipment delivery in the field. Specific categories cover the cost of system operation, maintenance, sustaining logic support, equipment modifications, and system/ equipment phase-out and disposal. Costs are generally determined for each year throughout the life cycle.

Figure 2.9 Description Of Cost Categories (Partial)[20]

Cost Category (Reference Figure B.4)	Method of Determination (Quantitive Expression)	Cost Category Description and Justification
Transportation and handling cost (C_{OMT})	$C_{OMT} = [(C_T)(Q_T) + (C_P)(Q_T)]$ C_T = Cost of transportation C_P = Cost of packing Q_T = Quantity of one-way shipments $C_T = [(W)(C_{TS})]$ W = Weight of item (lb) C_{TS} = Shipping cost ($/lb) C_{TS} will, of course, vary with the distance (in miles) of the one-way shipment. $C_P = [(W)(C_{TP})]$ C_{TP} = Packing cost ($/lb) Packing cost and weight will vary depending on whether reusable containers are employed.	Initial (first destination) transportation and handling costs are covered in C_{ILT}. This category includes all sustaining transportation and handling (or packing and shipping) between organizational, intermediate, depot, and supplier facilities in support of maintenance operations. This includes the return of faulty material items to a higher echelon; the transportation of items to a higher echelon for preventive maintenance (overhaul, calibration); and the shipment of spare/repair parts, personnel, data, etc., from the supplier to forward echelons.
Maintenance training cost (C_{OMT})	$C_{OMT} = [(Q_{SM})(T_T)(C_{TOM})]$ Q_{SM} = Quantity of maintenance students C_{TOM} = Cost of maintenance training ($/student-week) T_T = Duration of training program (weeks)	Initial maintenance training cost is included in C_{ILT}. This category covers the *formal* training of personnel assigned to maintain the prime equipment, test and support equipment, and training equipment. Such training is accomplished on a periodic basis throughout the system life-cycle to cover personnel replacements due to attrition. Total costs include instructor time; supervision; student pay and allowances while in school; training facilities (allocation of portion of facility required specifically for formal training); training aids and data; and student transportation as applicable.
Operational facilities cost (C_{OOF})	$C_{OOF} = [(C_{FFS} + C_U)(\%\text{ Allocation}) \times (N_{OS})]$ C_{FFS} = Cost of operational facility support ($/site) C_U = Cost of utilities ($/site) N_{OS} = Number of operational sites *Alternative Approach* $C_{OOF} = [(C_{FFS})(N_{OS})(S_O)]$ C_{FFS} = Cost of operational facility space ($/square foot/site). Utility cost allocation is included. S_O = Facility space requirements (square feet)	Initial acquisition cost for operational facilities is included in C_{ICD}. This category covers the annual recurring costs associated with the occupancy and maintenance (repair, paint, etc.) of operational facilities throughout the system life cycle. Utility costs are also included. Facility and utility costs are proportionately allocated to each system.

Figure 2.10 Description of cost categories (Continued) [20]

CHAPTER 3

IMPLEMENTATION

The ABC company needs to plan the digitization process so that it can keep up with Industry 4.0. These digitalization schemes also require analysis of large data sets. With these analyzes, it is aimed to respond more quickly to customer requests and increase productivity in production processes. The whole system must be connected to each other and be able to exchange information between all things.

It is not possible for ABC to go to Industry 4.0. For this reason, it is desired to analyze the current situation in the first stage and to set targets that will shed light on future plans. According to this approach, there are some aims to be reached in this thesis.

Time: One of the basic ways to ensure that the system can efficiently produce is to optimize the time. The aim here is to ensure that the employee is able to use the time efficiently while doing the job. That is, it is desired to minimize idle time while doing job. At the same time, it is aimed to bring the work that the employee has done manually still more efficiently with the robotic machines.

System Integration: Another goal is to examine the integration between units. The SSADM method was used for this purpose. With the SSADM diagrams, the product in the system and the associated production processes can be examined. Since the whole system is analyzed, it is aimed to be able to easily determine where the system is clogged and which process it is most time consuming.

Technology Readiness Levels: Our other goal is to ensure that the production system keeps pace with technological advances. The ABC company has an order-based production system, so the product range is very high. Multifunctional worktops are used because of the diversity of the products. When the level of technological maturity of the system is examined, it is aimed to make an improvement by considering these situations. Industry 4.0 approach is automotive front-end in production. In this context, the level of conformity of ABC company has been determined. By looking at these

results, it is aimed to shed light on the progress policy that the company will examine over the next few years.

Cost: Our other goal is to reduce costs in order to be able to produce efficiently. For this purpose, the costs of work done at each level are calculated taking unit cost into account. The cost of electricity and manpower cost were taken into account when calculating the cost.

The first method we use to achieve our goals is SSADM. SSADM was used to analyze all levels of the system. Structured Systems Analysis and Design Method consist of 3 levels. These levels are; (1) Departmental, (2) functional and (3) user requirements.

(1) Departmental; The first level is the level of independent departments. At this level, information and material flows across all departments, relationships with suppliers and customers are also shown.

(2) Functional; Level 2 is flow charts at functional level. The functions owned by independent departments are shown in flow diagrams, and the names of these flow diagrams are department names.

(3) User Requirements; The final level is the level at which user requirements are identified and shown. At the level of the user's requirement, the information and material flows are shown in detail at the bottom of the production process.



The red rectangle represents the *top-level event.* The rectangle appears at the very top of a system.



This symbol represents process



This symbol represents number of process



This symbol represents customer



This symbol the permanent customer

This symbol represents material flow



This symbol represents information flow

3.1 1.0 Business Management System Of ABC

1.0 ABC' s Business Management System is the first level of flow charts.
There are 4 independent departments in this level. These are;

- Management
- Manufacturing
- Quality
- Storage and Delivery.

This level shows information and material flows across departments, relationships with suppliers and customers. The system begins by communicating the proposal to the customer. If the bid remains in the firm, the contract and technical drawing are sent to company. After the work order is created, it is sent to the Manufacturing with the technical drawing. The products are sent to Quality for inspection. Finally, the products come to Storage and Delivery and delivered to the Customer.

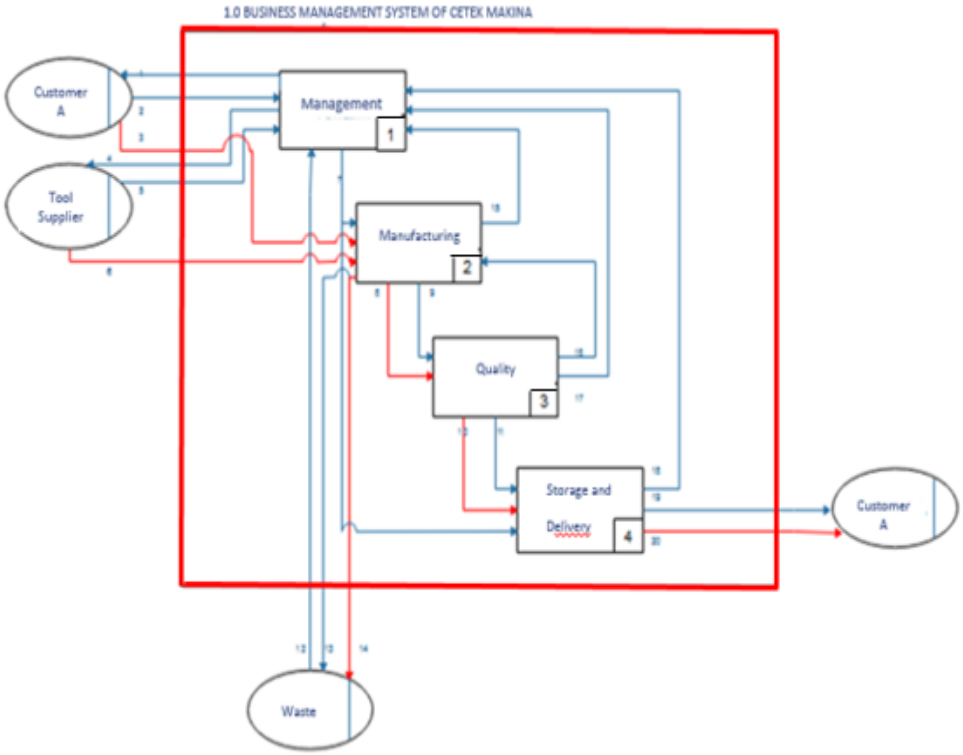

Figure 3.1 1.0 ABC's Business Management System

1.0 Business Management System Of Abc

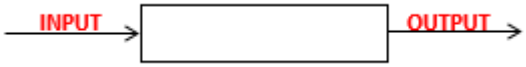

INPUT 2 : Customer Contract(Purpose, Technical Specifications, Quality, Party Size, Delivery Date, Accounting Data)

INPUT 3: Material (Name, Code, Measure, Weight, Raw Material)

INPUT 5: Supplier Contract (Purpose, Technical Specifications, Quality, Party Size, Delivery Date, Accounting Data)

INPUT 6: Material (Name, Code, Measure, Weight, Raw Material)

INPUT 12: Waste Information (Name, Code, Measure, Weight, Raw Material)

INPUT 37: Waste collection time, collection type, cost

OUTPUT 1: Customer Contract (Purpose, Technical Specifications, Quality, Party Size, Delivery Date, Accounting Data)

OUTPUT 4: Supplier Contract (Purpose, Technical Specifications, Quality, Party Size, Delivery Date, Accounting Data)

OUTPUT 13: Waste Information (Name, Code, Measure, Weight, Raw Material)

OUTPUT 14: Waste (Name, Code, Measure, Weight, Raw Material)

OUTPUT 19: Delivery Note (Serial Number, Type, Size And Quantity Information)

OUTPUT 20: Product

3.2 1.1 Management

Management is a process that ensures that the elements that make up the business operate in harmony. It is an organization based on the division of labor and specialization, in which a communication system is established between the management, the rulers and the ruled.
1.1 Management is the second level of flow charts.

There are 5 independent functions in this level.

These are;

- Management
- Accounting
- Purchasing
- Production Planning
- Quality Management

At the same time, information and material flows across functions, relationships with suppliers, customers and other departments are shown at this level. In this function, proposal preparation, accounting processes, material and raw material procurement, creation of work order according to the contract coming from the customer and quality control plan are established.

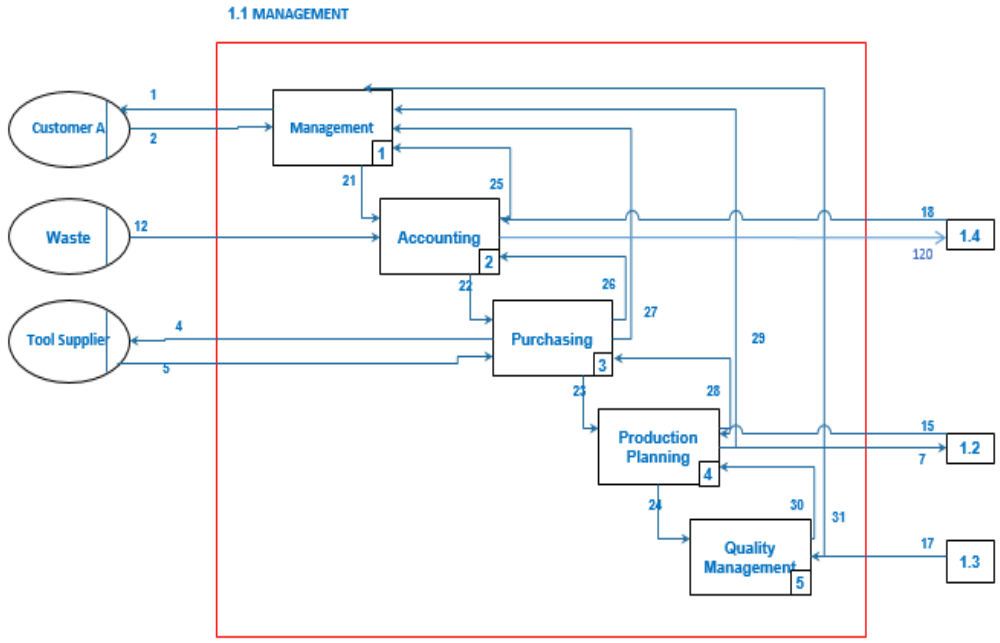

Figure 3.2 1.1 Management

1.1 Management

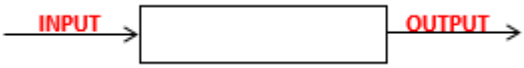

INPUT 2: Customer Contract (Purpose, Technical Specifications, Quality, Party Size, Delivery Date, Accounting Data)

INPUT 5: Supplier Contract (Purpose, Technical Specifications, Quality, Party Size, Delivery Date, Accounting Data)

INPUT 18: Delivery Note (Material Information, Technical Specifications, Quality, Party Size)

INPUT 15: Work Order (Material Information, Serial Number, Technical Specifications, Quality, Party Size, Time, Workstations)

INPUT 17: Quality/ Control Form (Serial Number, Technical Specifications, Quality, Quantity Information)

OUTPUT 1: Customer Contract (Purpose, Technical Specifications, Quality, Party Size, Delivery Date, Accounting Data)

OUTPUT 4: Tool Supplier Contract (Purpose, Technical Specifications, Quality, Party Size, Delivery Date, Accounting Data)

OUTPUT 120: Delivery Note (Material Information, Technical Specifications, Quality, Party Size)

OUTPUT 7: Work Order (Material Information, Serial Number, Technical Specifications, Quality, Party Size, Time, Workstations)

3.2.1 1.1.1 Management

- 1.1.1 Management is user level, ie level 3 of the flow chart.
- All units within the firm are bound to Management. Manages customer relationships.
- Reviews the activity report.
- Controls purchasing activities.
- Follows production activities.
- It follows quality / control activities.
- It gets a report on every subject.
- It makes evaluation and assignment.
- Makes final decision about tender It ensures that the company's short-term and long-term goals are determined.
- At the same time, information and material flows with other functions are shown in relation to the customers.

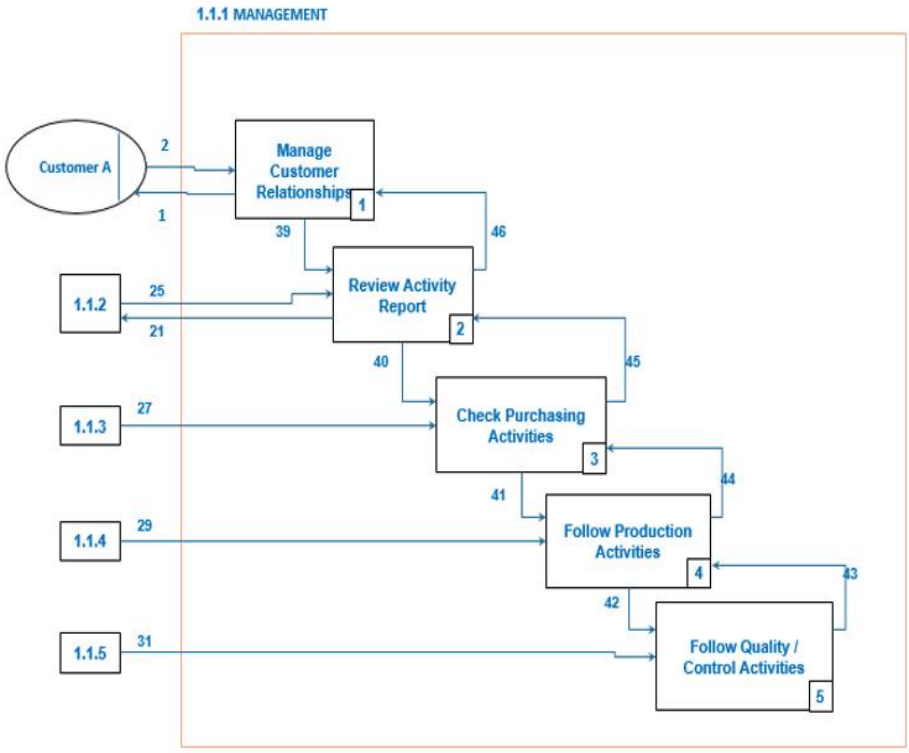

Figure 3.3 1.1.1 Management

1.1.1 Management

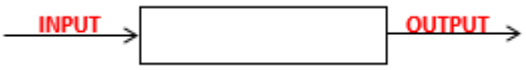

INPUT 2 : **Customer Contract (Purpose, Technical Specifications, Quality, Party Size, Delivery Date, Accounting Data)**

INPUT 25: **Customer Contract (Material Information, Party Size, Delivery Date, Accounting Data)**

INPUT 27: **Order Form (Supplier Name, Price, Technical Specifications, Quality, Party Size, Delivery Date)**

INPUT 29: **Work Order (Material Information, Serial Number, Technical Specifications, Quality, Party Size, Time, Workstations)**

INPUT 31: **Quality Plan (Technical Specifications, Quality, Party Size, Delivery Date)**

OUTPUT 1: **Customer Contract (Purpose, Technical Specifications, Quality, Party Size, Delivery Date, Accounting Data)**

OUTPUT 21: **Customer Contract (Purpose, Technical Specifications, Quality, Party Size, Delivery Date, Accounting Data)**

3.2.1.1 1.1.1.1 Manage Customer Relationships

- To represent the company against customers, suppliers, and government agencies.
- To establish good relations with the private and public institutions that the company is related to and aims to be related to.

3.2.1.2 1.1.1.2 Review Activity Report

- Checking the financial situation of the company, looking for financing.
- To follow collections and current accounts.
- Determines the financial policy of the company and warns interested parties to take necessary measures for the benefit of the company

3.2.1.3 1.1.1.3 Review Activity Report

- Review the reports made by the Purchasing Manager.
- Negotiating the quality management system with the supplier when necessary.

3.2.1.4 1.1.1.4 Review Activity Report

- Examine the reports produced by the Production Planning Manager.

3.2.1.5 1.1.1.5 Follow Quality / Control Activities

- Determines Quality Policy and Quality Targets.
- It supports employees in the implementation of the quality system.
- Checks when necessary.
- It chairs the management's oversight of the quality system.

3.2.2 1.1.2 Accounting

- The client and the supplier record the incoming contracts.
- It creates a prescription.
- It cuts the deliver note and shipment for the finished product.
- It delivers the prescription, deliver note and handing over to the relevant departments.

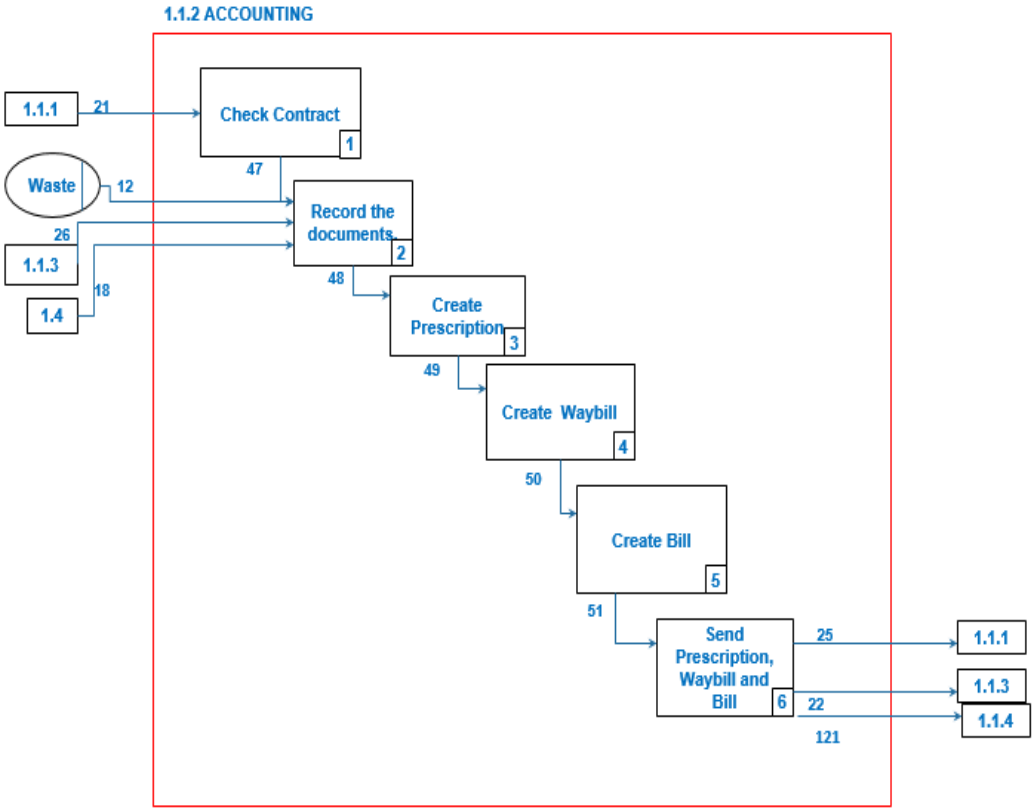

Figure 3.4 1.1.2 Accounting

1.1.2 Accounting

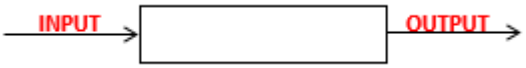

INPUT 21: Customer Contract (Purpose, Technical Specifications, Quality, Party Size, Delivery Date, Accounting Data)

INPUT 12: Waste Contract (Purpose, Technical Specifications, Quality, Party Size, Delivery Date, Accounting Data)

INPUT 26: Customer Contract (Purpose, Technical Specifications, Quality, Party Size, Delivery Date, Accounting Data)

INPUT 18: Delivery Note (Material Information, Technical Specifications, Quality, Party Size)

OUTPUT 25: Customer Contract (Material Information, Party Size, Delivery Date, Accounting Data)

OUTPUT 22: Customer Contract (Material Information, Party Size, Delivery Date, Accounting Data)

OUTPUT 121: Customer Contract (Material Information, Party Size, Delivery Date, Accounting Data)

3.2.2.1 1.1.2.1 Check Contract

- The contract from the administration is checked.

3.2.2.2 1.1.2.2 Record the documents.

- Contracts are recorded

3.2.2.3 1.1.2.3 Create Prescription

- A recipe is created according to the contract. This prescription specifies what operations are to be applied to the raw material.

3.2.2.4 1.1.2.4 Create Waybill

- Delivery note is created.

3.2.2.5 1.1.2.5 Create Bill

- Bill is created.

3.2.2.6 1.1.2.6 Send Prescription, Waybill and Bill

- The created recipe, invoice and shipment are sent to the relevant units.

3.2.3 1.1.3 Purchasing

- It ensures that purchase requisitions from the Production Planning and Accounting department are met.
- Provides purchase orders, orders follow-ups.
- This level;
- Makes Demand Verification
- Creates Material Requirement List
- Requests from Supplier
- Bids Evaluation
- Selects Supplier
- Fills up Order Form

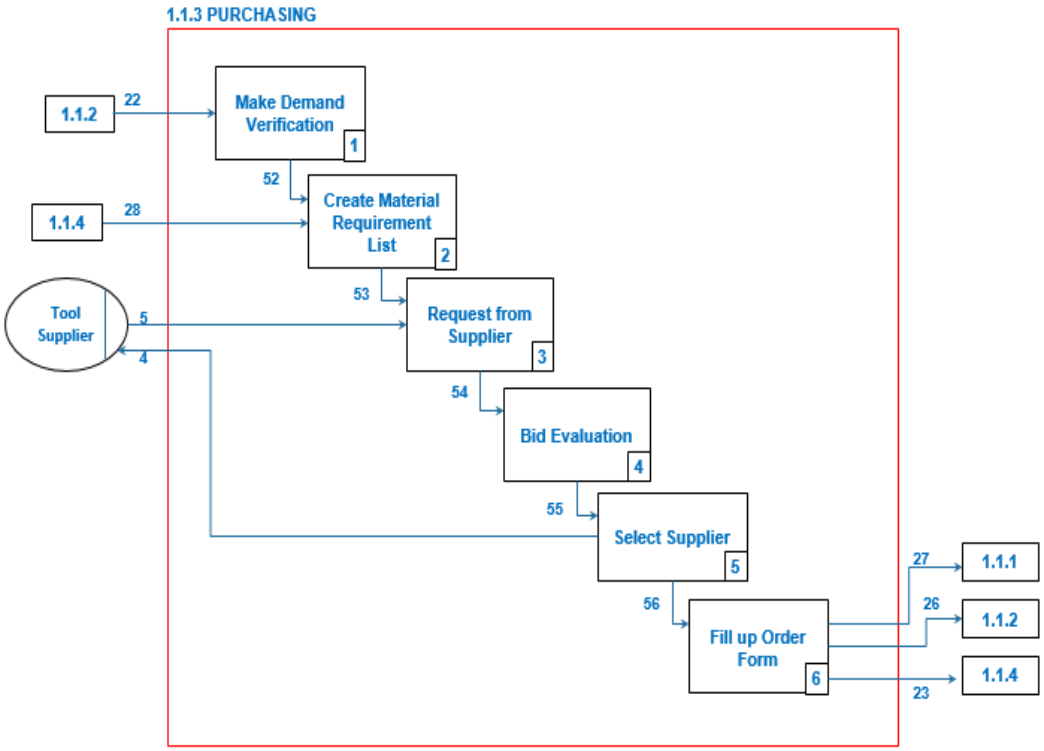

Figure 3.5 1.1.3 Purchasing

1.1.3 Purchasing



INPUT 22: Customer Contract (Material Information, Party Size, Delivery Date, Accounting Data)

INPUT 28: Material Requirement (Material Information, Party Size)

INPUT 5: Tool Supplier Contract (Material Information, Party Size, Delivery Date, Accounting Data)

OUTPUT 4: Tool Supplier Contract (Material Information, Party Size, Delivery Date, Accounting Data)

OUTPUT 27: Customer Contract (Purpose, Technical Specifications, Quality, Party Size, Delivery Date, Accounting Data)

OUTPUT 26: Customer Contract (Purpose, Technical Specifications, Quality, Party Size, Delivery Date, Accounting Data)

OUTPUT 23: Customer Contract (Purpose, Technical Specifications, Quality, Party Size, Delivery Date, Accounting Data)

3.2.3.1 1.1.3.1 Make Demand Verification

- Investigation and verification of accounting.

3.2.3.2 1.1.3.2 Create Material Requirement List

- A list of material requirements for production activities is created.

3.2.3.3 1.1.3.3 Request from Supplier

- Identification of potential suppliers for which purchasing.
- Receiving purchase proposals.

3.2.3.4 1.1.3.4 Bid Evaluation

- Evaluates supplier performance.

3.2.3.5 1.1.3.5 Select Supplier

- To make purchases from suppliers that are sufficient to be purchased.1.1.3.6 Fill up Order Form

3.2.4 1.1.4 Production Planning

- It makes the planning of producing the orders in a timely, accurate and high efficiency.
- It prepares and follows the production plan in order to benefit efficiently from human power, equipment, materials, installation and financial possibilities and to keep the finished and finished product stocks at optimum level.
- It periodically informs purchasing by determining the material requirements and following up the production plan and evaluating it.
- Evaluates the current situation by coordinating with the responsible departments of the relevant departments in order to be able to meet the new product offerings from the customers in terms of feasibility, suitability, competence and desired term.

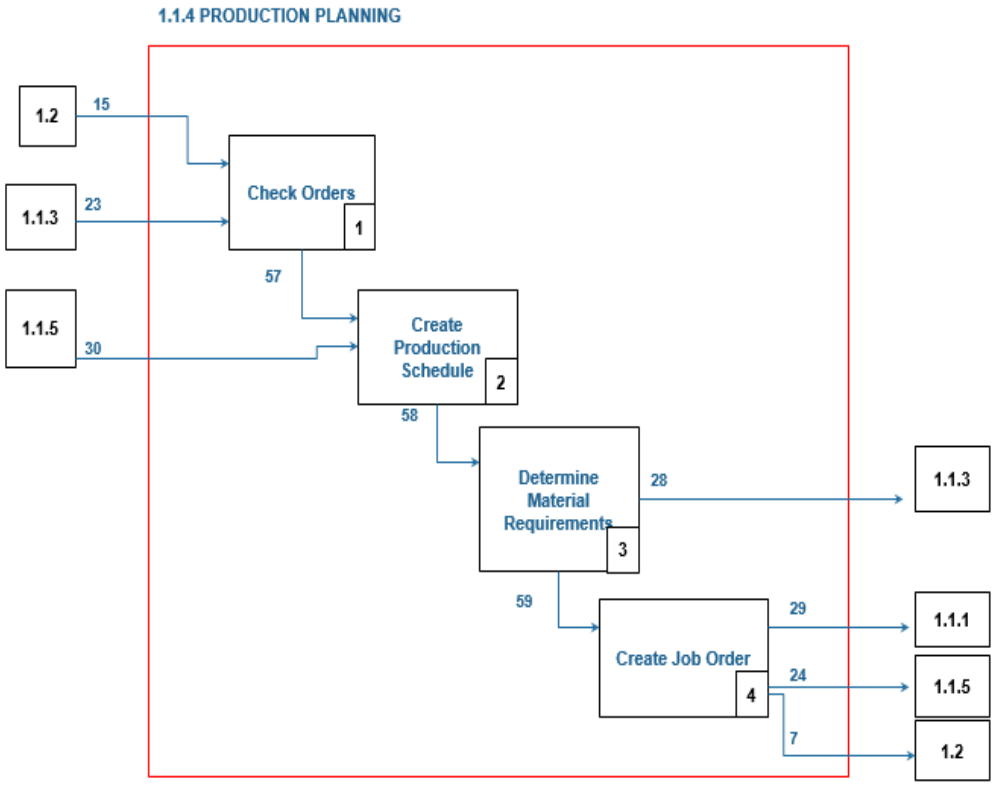

Figure 3.6 1.1.4 Production Planning

1.1.4 Production Planning

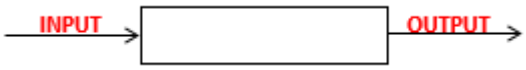

INPUT 15: Production Control Form (Material Information, Party Size, Delivery Date)

INPUT 23: Customer Contract (Purpose, Technical Specifications, Quality, Party Size, Delivery Date, Accounting Data

INPUT 30: Quality Plan (Technical Specifications, Quality, Party Size, Delivery Date)

OUTPUT 28: Material Requirement (Material Information, Party Size)

OUTPUT 29: Work Order (Material Information, Serial Number, Technical Specifications, Quality, Party Size, Time, Workstations)

OUTPUT 24: Work Order (Material Information, Serial Number, Technical Specifications, Quality, Party Size, Time, Workstations)

OUTPUT 7: Work Order (Material Information, Serial Number, Technical Specifications, Quality, Party Size, Time, Workstations)

3.2.4.1 1.1.4.1 Check Orders

- Inspection and verification of orders from purchasing.

3.2.4.2 1.1.4.2 Create Production Schedule

- Preparation of the weekly production schedule according to the order.

3.2.4.3 1.1.4.3 Determine Material Requirements

- Determination of raw material and material requirements for production according to order.

3.2.4.4 1.1.4.4 Create Job Order

- Preparation of work order according to order and technical drawing.

3.2.5 1.1.5 Quality Management

- The quality plan is prepared according to the work order from the Production Planning.
- Machinery and equipments for quality maintenance and repair are determined.
- A report on the quality system is prepared and the management is informed.

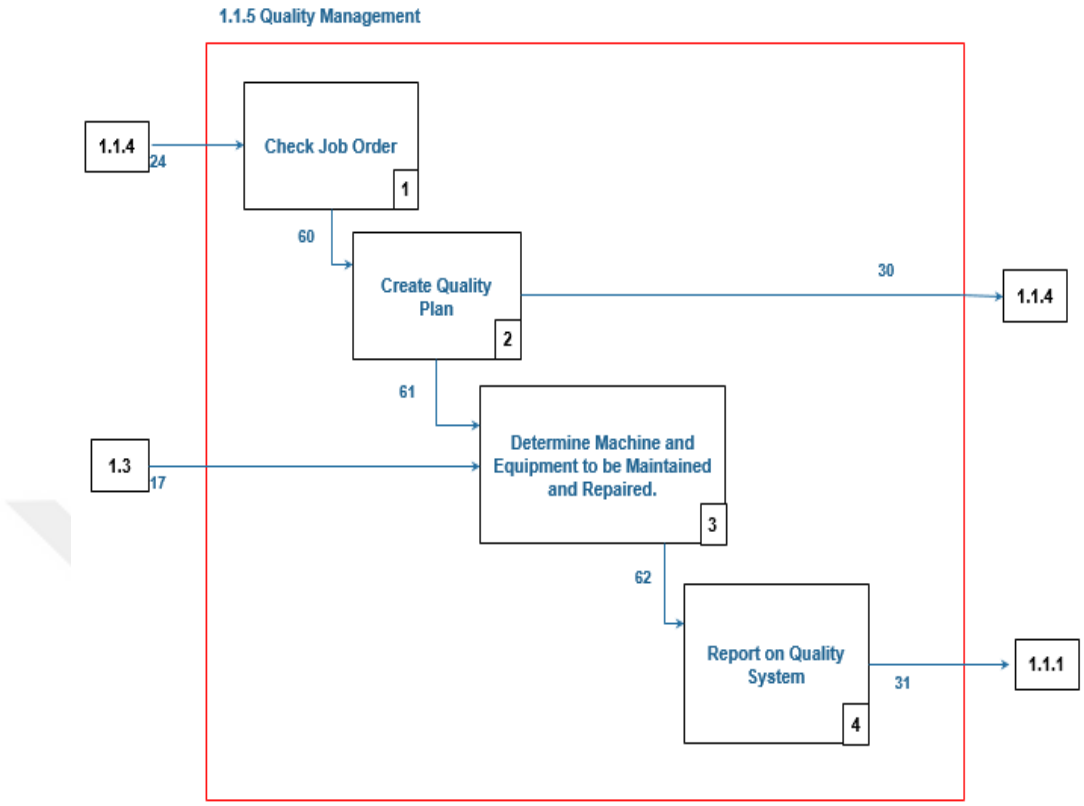

Figure 3.7 1.1.5 Quality Management

1.1.5 Quality Management

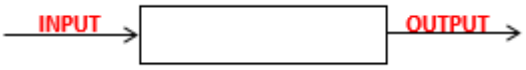

INPUT 24: Work Order (Material Information, Serial Number, Technical Specifications, Quality, Party Size, Time, Workstations)

INPUT 17: Quality/ Control Form (Material Information, Serial Number, Technical Specifications, Quality, Party Size, Time, Workstations)

OUTPUT 30: Quality Plan (Technical Specifications, Quality, Party Size, Delivery Date)

OUTPUT 31: Quality Plan (Technical Specifications, Quality, Party Size, Delivery Date)

3.2.5.1 1.1.5.1 Check Job Order

- Inspection and verification of orders from Production Planning.

3.2.5.2 1.1.5.2 Create Quality Plan

- Examination of quality manual, organization manual, procedures, processes and plans and creation of quality plan according to order orders.

3.2.5.3 1.1.5.3 Determine Machine and Equipment to be Maintained and Repaired.

- Identification of machinery and equipment to be maintained and repaired prior to production.

3.2.5.4 1.1.5.4 Report on Quality System

- Reporting on the quality system to Management.

3.3 1.2 Manufacturing



Figure 3.8 4-Axis CNC Lathe



Figure 3.9 CNC Vertical Milling Cutter



Figure 3.10 5-Axis CNC Vertical Machining Center

- It covers the process from arrival and control until the leveling process.
- Follows the implementation of the production program,
- Ensures the appropriateness of raw material and material procurement plans
- Controls of the operation

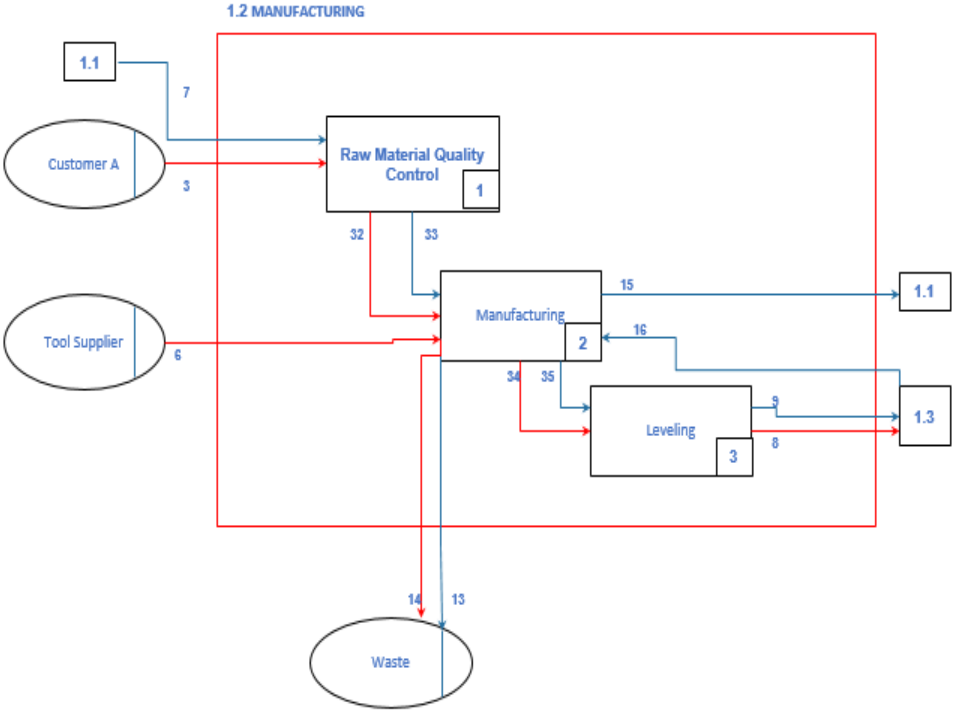

Figure 3.11 1.2 Manufacturing

1.2 Manufacturing

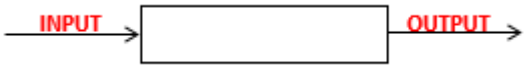

INPUT 7: Work Order (Material Information, Serial Number, Technical Specifications, Quality, Party Size, Time, Workstations)

INPUT 3: Raw Material (Material Information, Serial Number, Technical Specifications, Quality, Party Size)

INPUT 6: Tool (Material Information, Serial Number, Technical Specifications, Quality, Party Size)

INPUT 16: Work Order (Material Information, Serial Number, Technical Specifications, Quality, Party Size, Time, Workstations)

OUTPUT 15: Work Order (Material Information, Serial Number, Technical Specifications, Quality, Party Size, Time, Workstations)

OUTPUT 9: Work Order (Material Information, Serial Number, Technical Specifications, Quality, Party Size, Time, Workstations)

OUTPUT 8: Material (Material Information, Serial Number, Technical Specifications, Quality, Party Size)

OUTPUT 14: Waste (Material Information, Serial Number, Technical Specifications, Quality, Party Size)

OUTPUT 13: Waste Form (Material Information, Serial Number, Technical Specifications, Quality, Party Size)

3.3.1 1.2.1 Raw Material Quality Control

- The raw material coming from the customer is checked by looking at the delivery note, conformity report and test report.
- Then the label is affixed and placed in the depot until it is ready for production

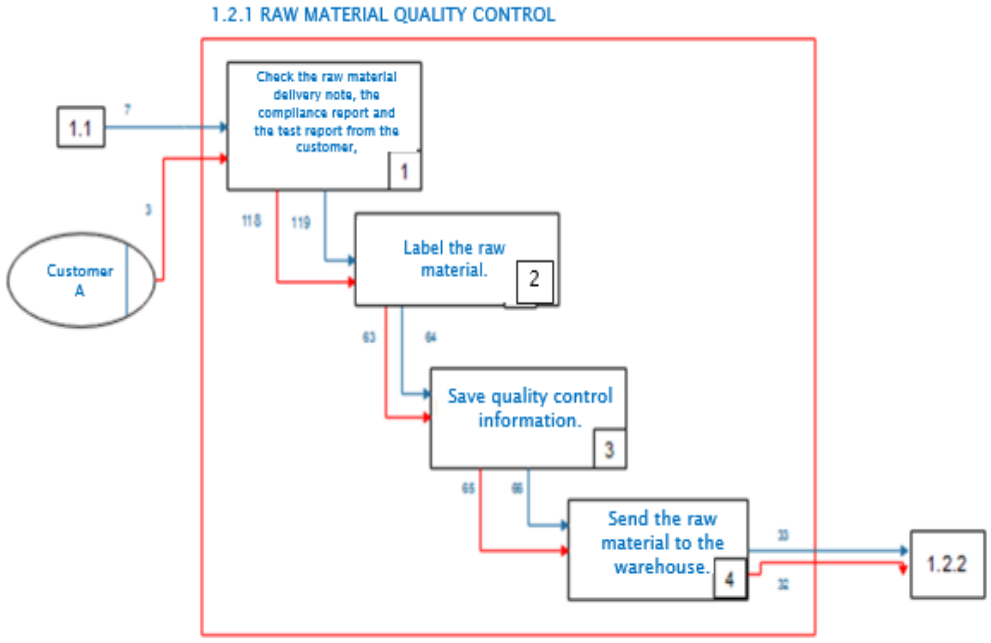

Figure 3.12 1.2.1 Raw Material Quality Control

1.2.1 Raw Material Quality Control

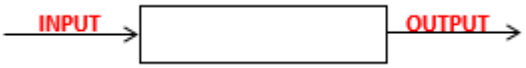

INPUT 7: **Work Order (Material Information, Serial Number, Technical Specifications, Quality, Party Size, Time, Workstations)**

INPUT 3: **Raw Material (Material Information, Serial Number, Technical Specifications, Quality, Party Size)**

OUTPUT 33: **Work Order (Material Information, Serial Number, Technical Specifications, Quality, Party Size, Time, Workstations, Quality/ Control Information)**

OUTPUT 32: **Raw Material (Material Information, Serial Number, Technical Specifications, Quality, Party Size)**

3.3.1.1 1.2.1.1 Check the raw material delivery note from the customer, the compliance report and the test report.

- Checking the delivery note, conformity report and test report according to the information given by the management.

3.3.1.2 1.2.1.2 Label the raw material.

- The raw materials are labeled by taking the delivery note, the conformity report and the test report.

3.3.1.3 1.2.1.3 Save quality control information.

- Preparing and recording the report.

3.3.1.4 1.2.1.4 Send the raw material to the warehouse.

- Placement of the raw material in a suitable place in the depot.

3.3.2 1.2.2 Manufacturing

- Manufacturing according to work order and technical drawing from management
- Making product dimension checks in the technical drawing during the production phase.
- Dispatching of removed parts to leveling process.
- Disposal of the wastes generated during the manufacturing process to the waste supplier.

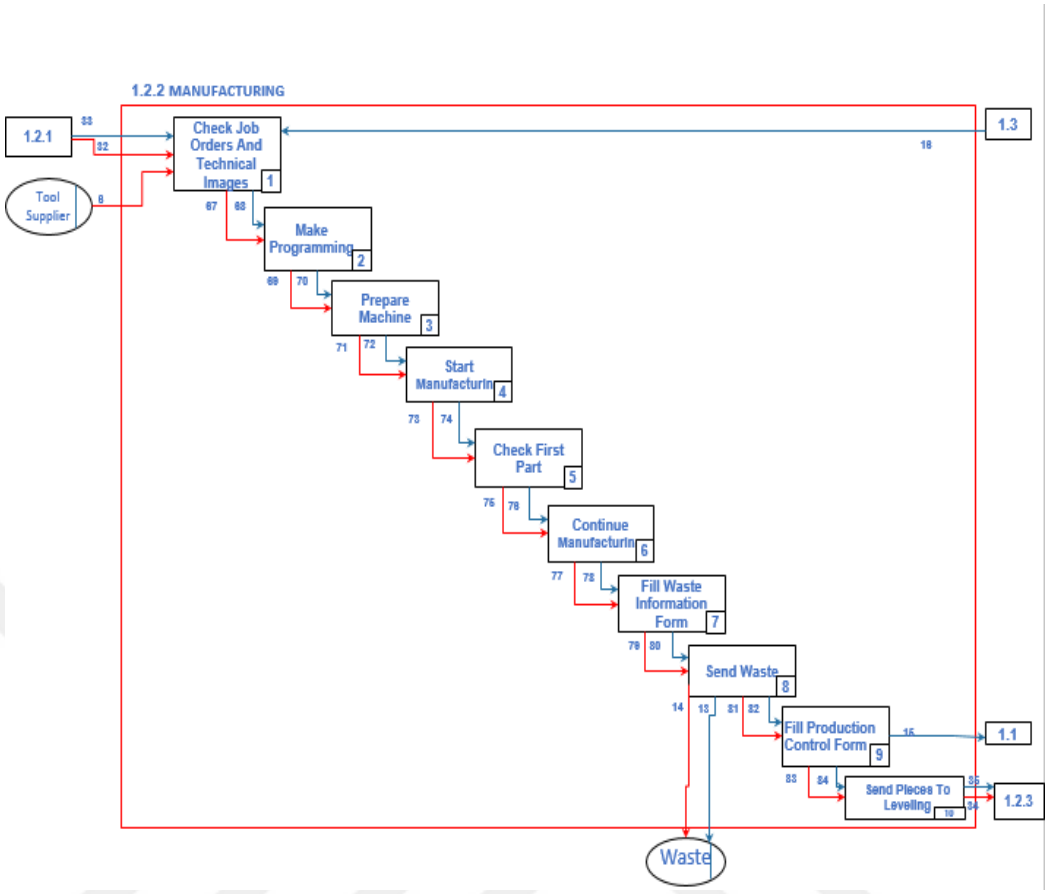

Figure 3.13 1.2.2 Manufacturing

1.2.2 Manufacturing

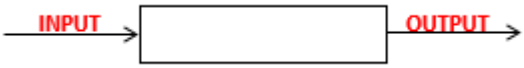

INPUT 33: Work Order (Material Information, Serial Number, Technical Specifications, Quality, Party Size, Time, Workstations, Quality/ Control Information)

INPUT 32: Raw Material (Material Information, Serial Number, Technical Specifications, Quality, Party Size)

INPUT 6: Tool (Material Information, Serial Number, Technical Specifications, Quality, Party Size)

INPUT 16: Work Order (Material Information, Serial Number, Technical Specifications, Quality, Party Size, Time, Workstations, Quality/ Control Information)

OUTPUT 35: Work Order (Material Information, Serial Number, Technical Specifications, Quality, Party Size, Time, Workstations, Quality/ Control Information)

OUTPUT 34: Material (Material Information, Serial Number, Technical Specifications, Quality, Party Size)

OUTPUT 14: Waste (Material Information, Serial Number, Technical Specifications, Quality, Party Size)

OUTPUT 13: Waste Form (Material Information, Serial Number, Technical Specifications, Quality, Party Size)

3.3.2.1 1.2.2.1 Check Job Orders And Technical Images

- Checking work orders and technical drawings from the management.

3.3.2.2 1.2.2.2 Make Programming

- Programming for CNC by looking at technical drawing and work order.

3.3.2.3 1.2.2.3 Prepare Machine

- Transferring the programs created in the computer by looking at the technical drawing to the CNC with flash and preparing the CNC for manufacturing.

3.3.2.4 1.2.2.4 Start Manufacturing

- Starting production at CNC.

3.3.2.5 1.2.2.5 Check First Part

- The first part is checked for conformity with technical drawing and work order.

3.3.2.6 1.2.2.6 Continue Manufacturing

- Continuation of manufacturing of CNC after controlling the first part size.

3.3.2.7 1.2.2.7 Fill Waste Information Form

- Filling in the information form for the wastes at the end of the manufacturing process.

3.3.2.8 1.2.2.8 Send Waste

- Sending wastes by waste information form.

3.3.2.9 1.2.2.9 Fill Production Control Form

- Filling of product information form (Machine no., Program name, Made amount, Unit processing time ...) at the end of the production.

3.3.2.10 1.2.2.10 Send Pieces To Leveling

- Sending the products to the leveling process with technical drawing, work order and product control form.

3.3.3 1.2.3 Leveling

- It is the process of removing burrs and surface roughness of products after they are manufactured. Different leveling procedures are applied according to the product type.



Figure 3.14 Vibrating Deburring



Figure 3.15 Vibrating Dryer

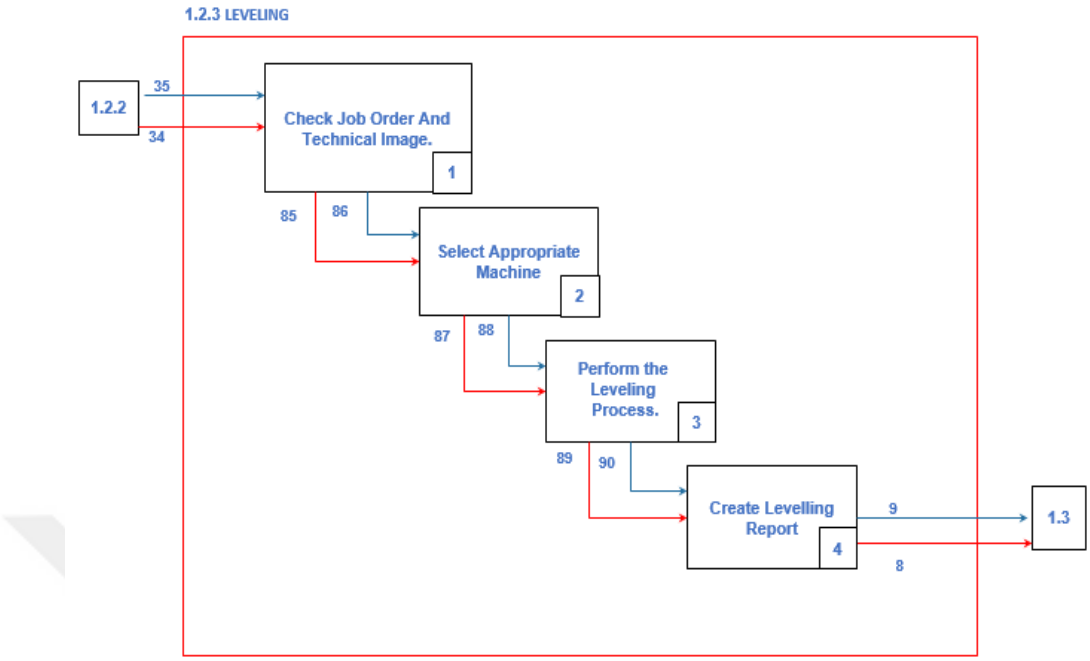

Figure 3.16 1.2.3 Leveling

1.2.3 Leveling

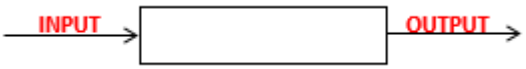

INPUT 35: **Work Order (Material Information, Serial Number, Technical Specifications, Quality, Party Size, Time, Workstations, Quality/ Control Information)**

INPUT 34: **Material (Material Information, Serial Number, Technical Specifications, Quality, Party Size)**

OUTPUT 9: **Work Order (Material Information, Serial Number, Technical Specifications, Quality, Party Size, Time, Workstations, Quality/ Control Information, Levelling Report)**

OUTPUT 8: **Material (Material Information, Serial Number, Technical Specifications, Quality, Party Size)**

3.3.3.1 1.2.3.1 Check Job Order And Technical Image.

- Comparison of technical drawing, work order and product control form and products from manufacturing.

3.3.3.2 1.2.3.2 Select Appropriate Machine

- Selecting of the appropriate machine for leveling according to product type.

3.3.3.3 1.2.3.3 Perform the Leveling Process.

- Performing the leveling process according to the work order with the selected machine.

3.3.3.4 1.2.3.4 Create Levelling Report

- Filling leveling report (information such as item number, order quantity, serial number) after the leveling process.

3.4 1.3 Quality



Figure 3.17 CMM



Figure 3.18 Profile Projector

- Controlling the suitability of the products that are manufactured to the customer's request.
- Measure control by looking at work order and technical drawing.

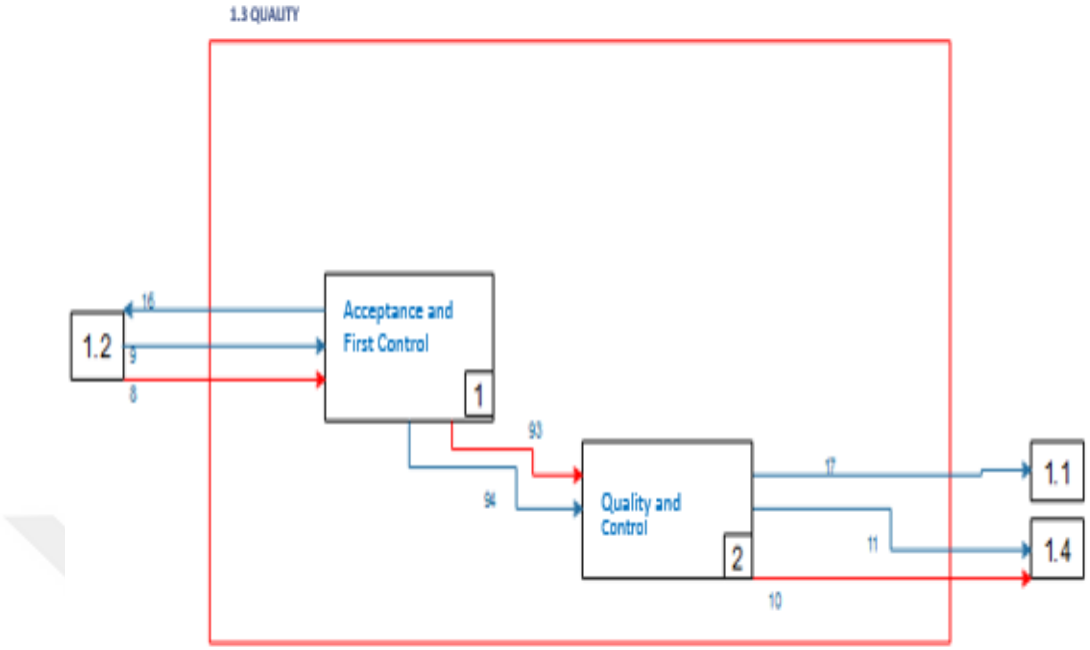

Figure 3.19 1.3 Quality

1.3 Quality

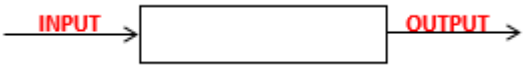

INPUT 9: Work Order (Material Information, Serial Number, Technical Specifications, Quality, Party Size, Time, Workstations, Quality/ Control Information, Levelling Report)

INPUT 8: Material (Material Information, Serial Number, Technical Specifications, Quality, Party Size)

OUTPUT 16: Work Order (Material Information, Serial Number, Technical Specifications, Quality, Party Size, Time, Workstations, Quality/ Control Information)

OUTPUT 17: Quality/ Control Form (Material Information, Serial Number, Technical Specifications, Quality, Party Size, Time, Workstations)

OUTPUT 11: Work Order (Material Information, Serial Number, Technical Specifications, Quality, Party Size, Time, Workstations, Levelling Report, Quality/ Control Form)

OUTPUT 10: Material (Material Information, Serial Number, Technical Specifications, Quality, Party Size)

3.4.1 1.3.1 Acceptance and First Control

- The product coming from the manufacturing is accepted for the quality and control operation by looking at the work order and technical drawing.
- Programming is performed for the machine in which the control operation is performed in accordance with the work order.

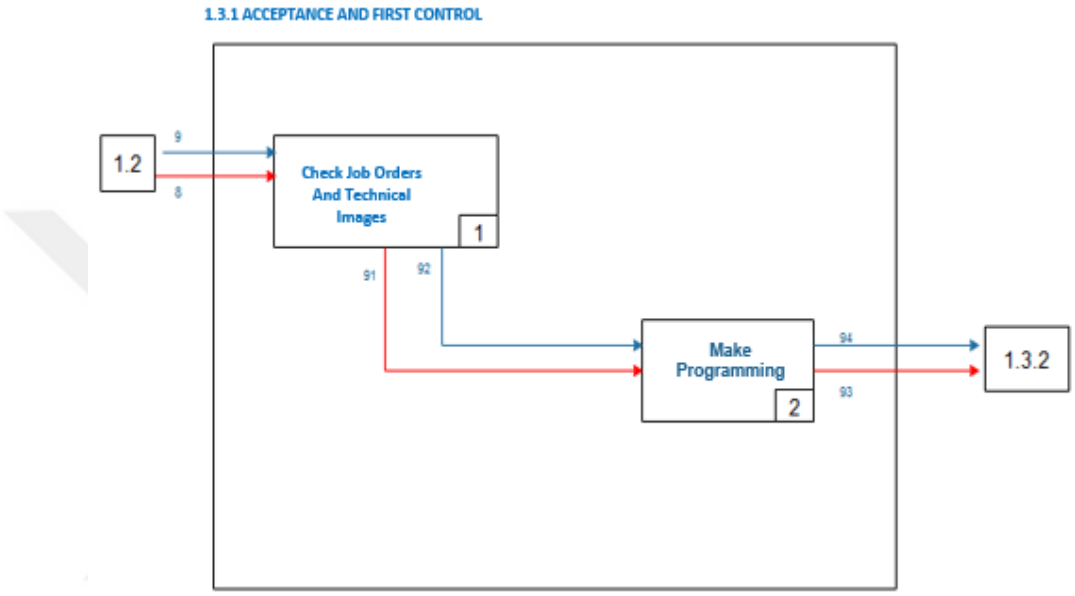

Figure 3.20 1.3.1 Acceptance And First Control

1.3.1 Acceptance And First Control

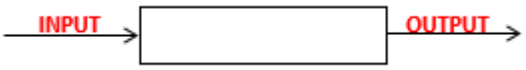

INPUT 9: **Work Order (Material Information, Serial Number, Technical Specifications, Quality, Party Size, Time, Workstations, Quality/ Control Information, Levelling Report)**

INPUT 8: Material (Material Information, Serial Number, Technical Specifications, Quality, Party Size)

OUTPUT 94: Work Order (Material Information, Serial Number, Technical Specifications, Quality, Party Size, Time, Workstations, Quality/ Control Information, Levelling Report)

OUTPUT 93: Material (Material Information, Serial Number, Technical Specifications, Quality, Party Size)

3.4.1.1 1.3.1.1 Check Job Orders And Technical Images

- Comparison of technical drawings, work orders and products from manufacturing.

3.4.1.2 1.3.1.2 Make Programming

- Performing the programming by using the computer according to the technical drawings and the measurements on the work order.

3.4.2 1.3.2 Quality and Control

At this level;

- The machine is prepared for measurement by using computer program.
- Dimension checks are performed on the machine for all parts that are manufactured.
- The information of the parts being inspected is transferred to the Quality / Control Form.
- The products of which are inspected are sent to the warehouse until the shipment is realized.

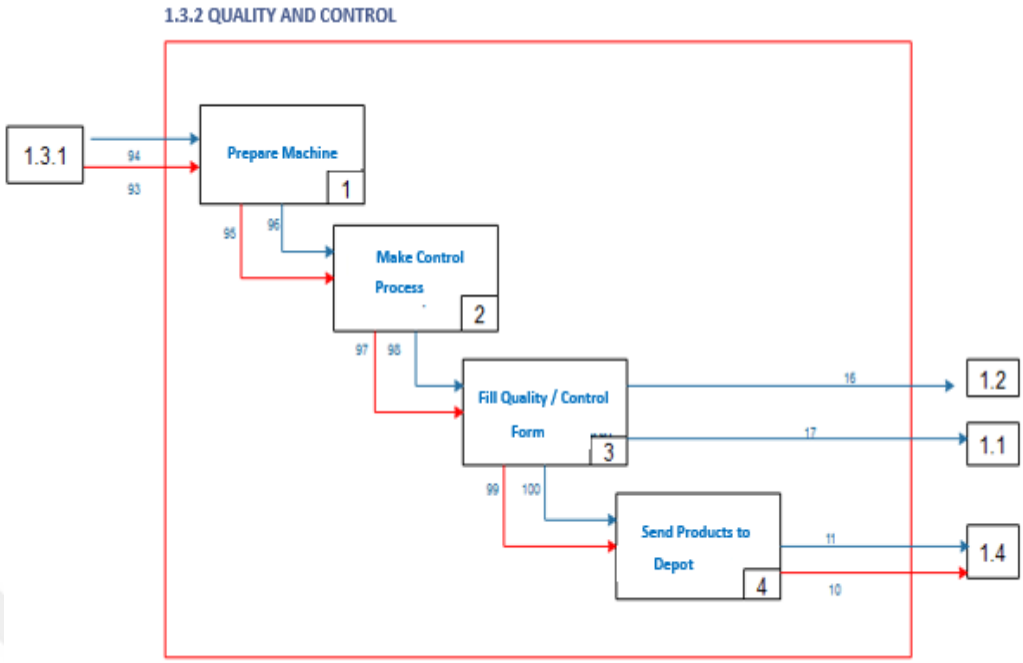

Figure 3.21 1.3.2 Qualıty And Control

1.3.2 Quality and Control

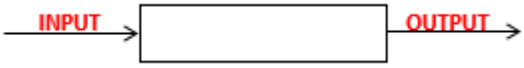

INPUT 94: **Work Order (Material Information, Serial Number, Technical Specifications, Quality, Party Size, Time, Workstations, Quality/ Control Information, Levelling Report)**

INPUT 93: **Material (Material Information, Serial Number, Technical Specifications, Quality, Party Size)**

OUTPUT 16: **Work Order (Material Information, Serial Number, Technical Specifications, Quality, Party Size, Time, Workstations, Quality/ Control Information)**

OUTPUT 17: **Quality/ Control Form (Material Information, Serial Number, Technical Specifications, Quality, Party Size, Time, Workstations)**

OUTPUT 11: **Work Order (Material Information, Serial Number, Technical Specifications, Quality, Party Size, Time, Workstations, Levelling Report, Quality/ Control Form)**

OUTPUT 10: **Material (Material Information, Serial Number, Technical Specifications, Quality, Party Size)**

Material (Material Information, Serial Number, Technical Specifications, Quality, Party Size)

3.4.2.1 1.3.2.1 Prepare Machine

- Preparing the machine for measurement by using computer program..

3.4.2.2 1.3.2.2 Make Control Process

- Check for all parts coming from manufacturing.

3.4.2.3 1.3.2.3 Fill Quality / Control Form

- Record of the information of the parts being inspected in the Quality / Control Form.

3.4.2.4 1.3.2.4 Send Products to Depot

- The products of which are controlled are sent to the warehouse until the shipment is realized.

3.5 1.4 Storage And Delivery

- The finished product is packed and registered.
- It is stored regularly.
- The products arriving at the time of term are shipped.

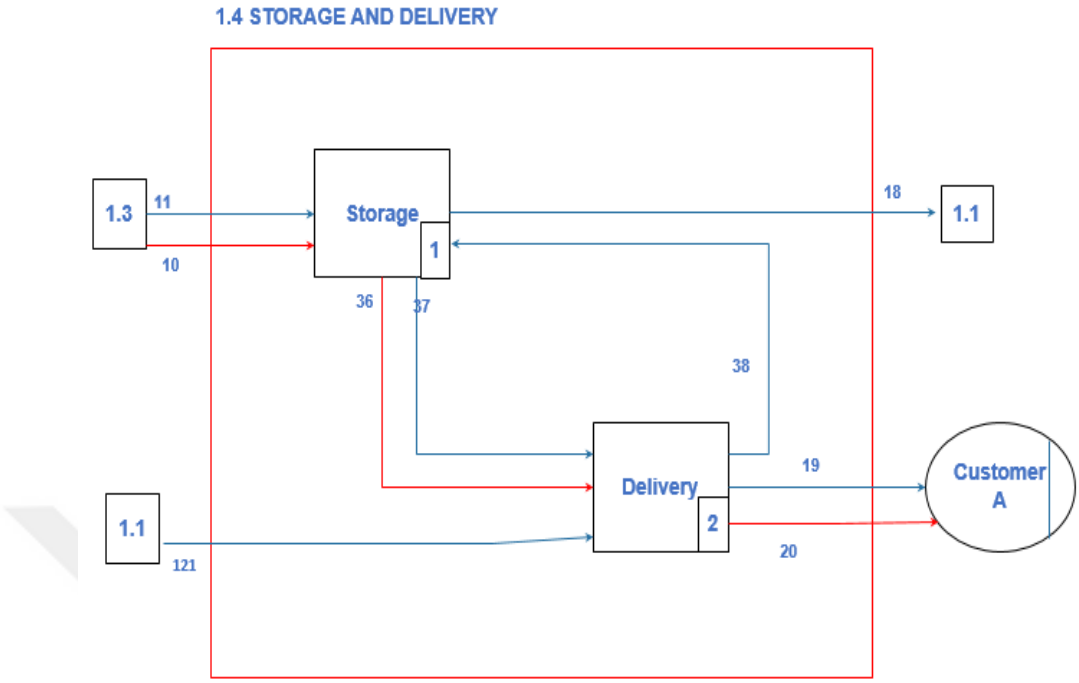

Figure 3.22 1.4 Storage And Delivery

1.4 Storage And Delivery

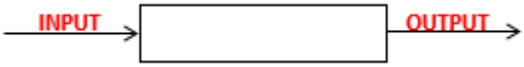

INPUT 11: Work Order (Material Information, Serial Number, Technical Specifications, Quality, Party Size, Time, Workstations, Levelling Report, Quality/ Control Form)

INPUT 10: Material (Material Information, Serial Number, Technical Specifications, Quality, Party Size) Material (Material Information, Serial Number, Technical Specifications, Quality, Party Size)

INPUT 121: Customer Contract (Material Information, Party Size, Delivery Date, Accounting Data)

OUTPUT 18: Delivery Note (Material Information, Technical Specifications, Quality, Party Size)

OUTPUT 19: Delivery Note (Serial Number, Type, Size And Quantity Information)

OUTPUT 20: Product

3.5.1 1.4.1 Storage

- The finished products are packed and stored in the warehouse before they are distributed to the customers.
- It includes storage control, receiving, placing, counting and sending activities.

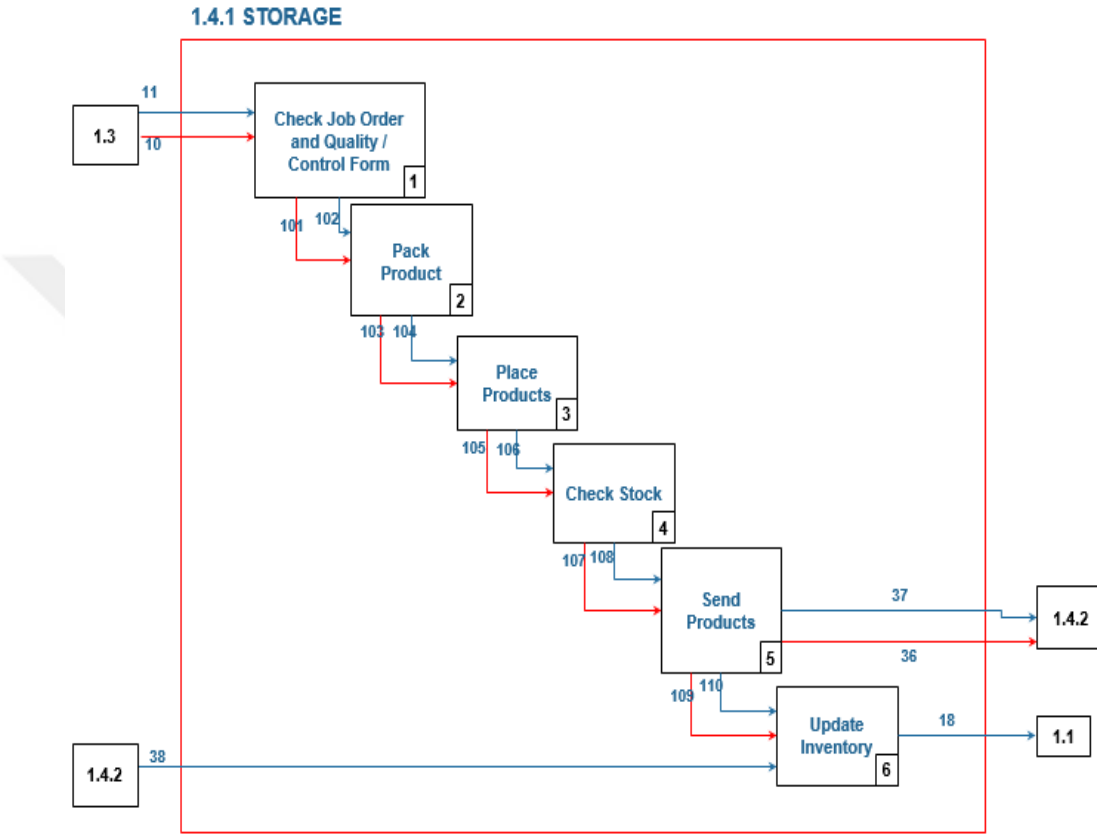

Figure 3.23 1.4.1 Storage

1.4.1. Storage

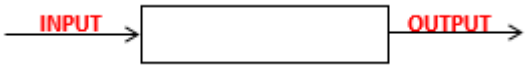

INPUT 11: Work Order (Material Information, Serial Number, Technical Specifications, Quality, Party Size, Time, Workstations, Levelling Report, Quality/ Control Form)

INPUT 10: Material (Material Information, Serial Number, Technical Specifications, Quality, Party Size)

INPUT 38: Shipment Information (Material Information, Serial Number, Technical Specifications, Party Size)

OUTPUT 37: Delivery Note (Material Information, Technical Specifications, Quality, Party Size)

OUTPUT 36: Delivery Note (Serial Number, Type, Size And Quantity Information)

OUTPUT 18: Product

3.5.1.1 1.4.1.1 Check Job Order and Quality / Control Form

- Checking of products coming with work order and Quality / Control Form.

3.5.1.2 1.4.1.2 Pack Product

- The material delivered to the warehouse is packed.

3.5.1.3 1.4.1.3 Place Products

- Placement of the products at the appropriate place in the depot with the information form.

3.5.1.4 1.4.1.4 Check Stock

- Checking stock.

3.5.1.5 1.4.1.5 Send Products

- Determination of the products arriving at the time of delivery after the stock is checked and sent for shipment.

3.5.1.6 1.4.1.6 Update Inventory

- Updating the stock after the products shipped for shipment.

3.5.2 1.4.2 Delivery

- The products are prepared in accordance with the orders received.
- Transportation of the goods with delivery notes is provided on time of the customer.

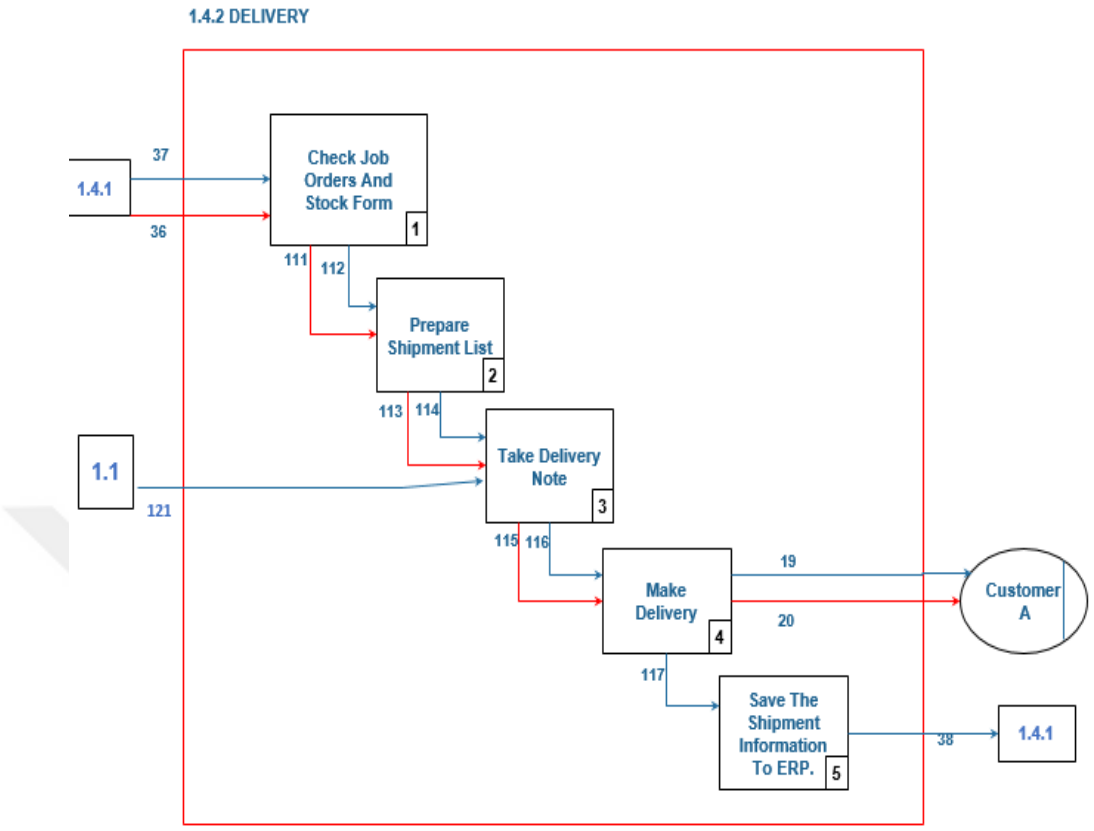

Figure 3.24 1.4.2 Delivery

1.4.2 Delivery



INPUT 37: Delivery Note (Material Information, Technical Specifications, Quality, Party Size)

INPUT 36: Delivery Note (Serial Number, Type, Size And Quantity Information)

INPUT 121: Customer Contract (Material Information, Party Size, Delivery Date, Accounting Data)

OUTPUT 38: Shipment Information (Material Information, Serial Number, Technical Specifications, Party Size)

OUTPUT 19: Delivery Note (Serial Number, Type, Size And Quantity Information)

OUTPUT 20: Product

3.5.2.1 1.4.2.1 Check Job Orders And Stock Form

- Control of work order and stock form.

3.5.2.2 1.4.2.2 Prepare Shipment List

- Preparing the list for the parts to be delivered.

3.5.2.3 1.4.2.3 Take Delivery Note

- Create delivery note for parts.

3.5.2.4 1.4.2.4 Make Delivery

- Send customer parts.

3.5.2.5 1.4.2.5 Save The Shipment Information To ERP.

- Recording of delivered parts information to ERP.

3.6 Technology Readiness Levels (TRL)

In this thesis, non-parametric analysis was performed based on Technology Readiness Levels. In systems consisting of more than one part, the TRL values of the parts are determined to determine the total of the progeny while the TRL value is determined. The TRL values of different parts of the system may be different. In such a case, the TRL values of the parts forming the system are defined one by one, and if there is a part lower than TRL 5, it is appropriate to make recommendations for this.

According to this analysis, activities performed in the third level for each function are labeled with these metrics. As a result of this labeling, ABC Company's technology preparation level has been determined. The nonparametric values are as shown below.

There are many analysis methods that we can use while doing these calculations. In this thesis, the arithmetic average method was used. After each user requierment level was determined, the level of skill maturity was found with that arithmetic average. Then TRL was found at the function level by the same method. Finally, the TRL level of the ABC system was reached using the arithmetic average method. The technology levels given in the table are rounded values with full count.

Technology Readiness Level is an index used to measure the level of technology maturity and usability of a developing company. By creating a standard, many projects

will be able to use the data as a reference. For example, in the context of a tender, the role of the player will change by looking at the TRL. In other words, TRL can be used as a scorecard showing the technological level of firms. For this reason TRL has been used in the transition to Industry 4.0. The aim of the thesis is to measure the readiness of the ABC company for the use of technology and to have knowledge of the projects to be carried out for system development.

Table 3. 1 Technology Readiness Levels Metrics

1	Manual	The work is done by person without using machines.
2	Semiautomatic	The work is done by person using the machine.
3	Automatic	The work is done by the machine according to the command given by the man.
4	Fully Automatic	The work is done by the machine without people order.
5	Wi-Fi	The work is done by the machine with the command given by the other machine.

Table 3. 2 ABC's Business Management System

Technology Readiness Levels	
1.0 ABC' s Business Management System	**2**
1.1 Management	**2**
1.2 Manufacturing	**2**
1.3 Quality	**2**
1.4 Storage and Delivery	**2**

Table 3.2 shows the technology readiness level of ABC. TRL levels of departments are calculated on other tables. The arithmetic mean of the TRL levels of these departments is calculated and the overall readiness level of the system is 2.

Table 3.3 1.1 Management

1.1 Management	
1.1.1 Management	**2**
1.1.2 Accounting	**2**
1.1.3 Purchasing	**2**
1.1.4 Production Planning	**2**
1.1.5 Quality Management	**2**

Table 3.3 shows the technology maturity level of Management. The TRL levels of the user requirments have been determined by observing the ABC firm. The TRL of this level is calculated by the arithmetic mean of all user requirments and is 2.

Table 3. 4 1.1.1 Management

1.1.1 Management	
1.1.1.1 Manage Customer Relationships	**1**
1.1.1.2 Review Activity Report	**2**
1.1.1.3 Review Activity Report	**2**
1.1.1.4 Review Activity Report	**2**
1.1.1.5 Follow Quality / Control Activities	**2**

Table 3.4 shows the technology maturity level of Management. The TRL levels of the user requirments have been determined by observing the ABC firm. The TRL of this level is calculated by the arithmetic mean of all user requirments and is 2.

Table 3. 5 1.1.2 Accounting

1.1.2 Accounting	
1.1.2.1 Check Contract	**2**
1.1.2.2 Record the documents	**2**
1.1.2.3 Create Prescription	**2**
1.1.2.4 Create Waybill	**2**
1.1.2.5 Create Bill	**2**
1.1.2.6 Send Prescription, Waybill and Bill	**2**

Table 3.5 shows the technology maturity level of Accounting. The TRL levels of the user requirments have been determined by observing the ABC firm. The TRL of this level is calculated by the arithmetic mean of all user requirments and is 2.

Table 3. 6 1.1.3 Purchasing

1.1.3 Purchasing	
1.1.3.1 Make Demand Verification	**2**
1.1.3.2 Create Material Requirement List	**2**
1.1.3.3 Request from Supplier	**2**
1.1.3.4 Bid Evaluation	**2**
1.1.3.5 Select Supplier	**2**
1.1.3.6 Fill up Order Form	**2**

Table 3.6 shows the technology maturity level of Purchasing. The TRL levels of the user requirments have been determined by observing the ABC firm. The TRL of this level is calculated by the arithmetic mean of all user requirments and is 2.

Table 3. 7 1.1.4 Production Planning

1.1.4 Production Planning	
1.1.4.1 Check Orders	**2**
1.1.4.2 Create Production Schedule	**2**
1.1.4.3 Determine Material Requirements	**2**
1.1.4.4 Create Job Order	**2**

Table 3.7 shows the technology maturity level of Production Planning. The TRL levels of the user requirments have been determined by observing the ABC firm. The TRL of this level is calculated by the arithmetic mean of all user requirments and is 2.

Table 3. 8 1.1.5 Quality Management

1.1.5 Quality Management	
1.1.5.1 Check Job Order	**2**
1.1.5.2 Create Quality Plan	**2**
1.1.5.3 Determine Machine and Equipment to be Maintained and Repaired	**2**
1.1.5.4 Report on Quality System	**2**

Table 3.8 shows the technology maturity level of Quality Management. The TRL levels of the user requirments have been determined by observing the ABC firm. The TRL of this level is calculated by the arithmetic mean of all user requirments and is 2.

Table 3. 9 1.2 Manufacturing

1.2 Manufacturing	
1.2.1 Raw Material Quality Control	**2**
1.2.2 Manufacturing	**2**
1.2.3 Leveling	**3**

Table 3.9 shows the technology maturity level of Manufacturing. The TRL levels of the user requirments have been determined by observing the ABC firm. The TRL of this level is calculated by the arithmetic mean of all user requirments and is 2.

Table 3. 10 1.2.1 Raw Material Quality Control

1.2.1 Raw Material Quality Control	
1.2.1.1 Check the raw material delivery note from the customer, the compliance report and the test report	**1**
1.2.1.2 Label the raw material	**1**
1.2.1.3 Save quality control information	**2**
1.2.1.4 Send the raw material to the warehouse	**2**

Table 3.10 shows the technology maturity level of Raw Material Quality Control. The TRL levels of the user requirments have been determined by observing the ABC firm. The TRL of this level is calculated by the arithmetic mean of all user requirments and is 2.

Table 3. 11 1.2.2 Manufacturing

1.2.2 Manufacturing	
1.2.2.1 Check Job Orders And Technical Images	**1**
1.2.2.2 Make Programming	**2**
1.2.2.3 Prepare Machine	**2**
1.2.2.4 Start Manufacturing	**3**
1.2.2.5 Check First Part	**1**
1.2.2.6 Continue Manufacturing	**3**
1.2.2.7 Fill Waste Information Form	**1**
1.2.2.8 Send Waste	**2**
1.2.2.9 Fill Production Control Form	**1**
1.2.2.10 Send Pieces To Leveling	**2**

Table 3.11 shows the technology maturity level of Manufacturing. The TRL levels of the user requirments have been determined by observing the ABC firm. The TRL of this level is calculated by the arithmetic mean of all user requirments and is 2.

Table 3. 12 1.2.3 Leveling

1.2.3 Leveling	
1.2.3.1 Check Job Order And Technical Image	**1**
1.2.3.2 Select Appropriate Machine	**1**
1.2.3.3 Perform the Leveling Process	**3**
1.2.3.4 Create Levelling Report	**1**

Table 3.12 shows the technology maturity level of Leveling. The TRL levels of the user requirments have been determined by observing the ABC firm. The TRL of this level is calculated by the arithmetic mean of all user requirments and is 3.

Table 3. 13 1.3 Quality

1.3 Quality	
1.3.1 Acceptance And First Control	**2**
1.3.2 Quality and Control	**2**

Table 3.13 shows the technology maturity level of Quality. The TRL levels of the user requirments have been determined by observing the ABC firm. The TRL of this level is calculated by the arithmetic mean of all user requirments and is 2.

Table 3. 14 1.3.1 Acceptance And First Control

1.3.1 Acceptance And First Control	
1.3.1.1 Check Job Orders And Technical Images	**1**
1.3.1.2 Make Programming	**2**

Table 3.14 shows the technology maturity level of Acceptance And First Control. The TRL levels of the user requirments have been determined by observing the ABC firm. The TRL of this level is calculated by the arithmetic mean of all user requirments and is 2.

Table 3. 15 1.3.2 Quality and Control

1.3.2 Quality and Control	
1.3.1.1 Prepare Machine	**2**
1.3.1.2 Make Control Process	**3**
1.3.1.3 Fill Quality / Control Form	**2**
1.3.1.4 Send Products to Depot	**2**

Table 3.15 shows the technology maturity level of Quality and Control. The TRL levels of the user requirments have been determined by observing the ABC firm. The TRL of this level is calculated by the arithmetic mean of all user requirments and is 2.

Table 3. 16 1.4 Storage and Delivery

1.4 Storage and Delivery	
1.4.1 Storage	**2**
1.4.2 Delivery	**2**

Table 3.16 shows the technology maturity level of Storage and Delivery. The TRL levels of the user requirments have been determined by observing the ABC firm. The TRL of this level is calculated by the arithmetic mean of all user requirments and is 2.

Table 3. 17 1.4.1 Storage

1.4.1 Storage	
1.4.1.1 Check Job Order and Quality / Control Form	**1**
1.4.1.2 Pack Product	**1**
1.4.1.3 Place Products	**1**
1.4.1.4 Check Stock	**2**
1.4.1.5 Send Products	**2**
1.4.1.6 Update Inventory	**2**

Table 3.17 shows the technology maturity level of Storage. The TRL levels of the user requirments have been determined by observing the ABC firm. The TRL of this level is calculated by the arithmetic mean of all user requirments and is 2.

Table 3. 18 1.4.2 Delivery

1.4.2 Delivery	
1.4.2.1 Check Job Orders And Stock Form	**1**
1.4.2.2 Prepare Shipment List	**2**
1.4.2.3 Take Delivery Note	**2**
1.4.2.4 Make Delivery	**2**
1.4.2.5 Save The Shipment Information To ERP.	**2**

Table 3.18 shows the technology maturity level of Delivery. The TRL levels of the user requirments have been determined by observing the ABC firm. The TRL of this level is calculated by the arithmetic mean of all user requirments and is 2.

The higher the production technology of the companies, the greater the competitiveness. Companies with high technology level in production are producing quality and error-free products by reducing labor cost.

According to the results of the table ABC's technology readiness level is 2. This result has shown us that the system is Semiautomatic. In other words, the work done is done by the machines used by the people. In order for ABC to be ready for Industry 4.0, the TRL level must be at least 4. According to this result, it is necessary to make an improvement by considering the cost in the digitalization process.

3.7 Cost

This paper suggests an activity-based analysis to develop a cost structure. This analysis identifies the cost elements to be considered for The ABC Company. The cost breakdown structure is started from the user requirements, which is the third level. Every kind of cost for ABC Company (such as workforce, electricity) is calculated for each activity made at this level. This calculation is done for the third level of all

functions and the total cost of each function is also known as the total cost of each department. The following is an example of how to do the CBS table.

The ABC company produces order-based production. It is aimed to minimize the total cost of the system. When this calculation is made, the unit cost of a product contracted with the customer is calculated. Based on the cost breakdown structure, ABC's cost is calculated at each level. The following mathematical model has been used in this calculation. The calculation is started from the user requirements. The time spent at the user level, the electricity cost, and the labor cost for the operation are taken into account in minutes. After the user-level costs have been calculated, the functional level has been found. The costs at this level were obtained by collecting the costs of user needs. Finally, the costs of the departments were found and the departmental costs were collected and the production cost for an order was found by ABC.

Function Cost Formula equation (Eq. 3.1) can be written as follows:

$$\textit{Function Cost Formula } (C_f) = \sum_{g=1}^{l} [t_g (p_g + e_g)] \quad (3.1)$$

C_f= Function Cost
t= Operation Time
p= Man Power Cost Per Minute
e= Electricity Cost Per Minute
l= User Requirements Quantity

C_f, , represents the cost of a function. When the cost calculation is performed, the manpower cost and electricity costs for each level of user in the function are calculated according to the minutes used.

t, represents the time in minutes required to complete a job at user requirements.

p, refers to the labor cost per minutes required to carry out a business. When calculating this cost, the employee's monthly salary is calculated in minutes.

e, refers to the electricity cost required to carry out a business. When this cost is calculated, the cost of energy to complete a job is calculated on a minute-by-minute basis. In this calculation, the monthly energy cost of the plant is taken into account.

l, represents user requirements quantity

Department Cost Formula equation (Eq. 3.2) can be written as follows:

$$\textit{Department Cost Formula equation } (C_d) = \sum_{f=1}^{k} C_f \quad (3.2)$$

C_d= Department Cost

k= functions quantity

C_d, refers to the cost of a department. Cost is obtained by summing the cost of the functions belonging to that department.

k, represents functions quantity

ABC's Cost Formula equation (Eq. 3.3) can be written as follows:

$$\textit{ABC's Cost Formula } (C_{ABC}) = \sum_{d=1}^{m} C_d \quad (3.3)$$

m= departmental quantity

C_{ABC}= ABC's Cost

C_{ABC}, refers to the cost of the entire system. When this cost account is made, all processes from the beginning to the end of the process are taken into account. The total cost is achieved by summing the costs of all departments.

m, represents departmental quantity.

Table 3. 19 1.0 ABC' s Business Management System

COST CATEGORY	Time (min)	Manpower Cost (TL)	Cost (TL)
1.0 ABC' s Business Management System	42877	12583.54	20057.57
1.1 Management	4832	4213.64	4459.12
1.2 Manufacturing	37823	8321.06	15507.43
1.3 Quality	170	37.4	69.7
1.4 Storage and Delivery	52	11.44	21.32

Table 3.19 shows the total cost of the ABC company. When calculating the unit cost of Manpower per minutes, the 1-month working salary is divided by the total 1-month working time. This unit cost is shown in minutes. The other costs are multiplied by the

minutes spent to obtain the total cost. Finally, the total manpower cost and total cost of the ABC were found by adding the costs of all departments. Total cost of man power is 12583.54 TL. The total cost of ABC is 20057.57 TL.

Table 3. 20 1.1 Management

COST CATEGORY	Time (min)	Manpower Cost (TL)	Cost (TL)
1.1 Management	4832	4213.64	4459.12
1.1.1 Management	3540	3929.4	3929.4
1.1.2 Accounting	30	6.6	12.3
1.1.3 Purchasing	607	133.54	248.87
1.1.4 Production Planning	370	81.4	151.7
1.1.5 Quality Management	285	62.7	116.85

Table 3.20 shows the total cost of the Management. When calculating the unit cost of Man Power, the 1-month working salary is divided by the total 1-month working time. This unit cost is shown in minutes. Finally, the other costs are multiplied by the minutes spent to obtain the total cost. Man power cost is 4213.64 TL. The total cost is 4459.12 TL.

Table 3. 21 1.1.1 Management

COST CATEGORY	Time (min)	Manpower Cost (TL)	Cost (TL)
1.1.1 Management	3540	3929.4	3929.4
1.1.1.1 Manage Customer Relationships	2880	3196.8	3196.8
1.1.1.2 Review Activity Report	240	266.4	266.4
1.1.1.3 Review Activity Report	120	133.2	133.2
1.1.1.4 Review Activity Report	120	133.2	133.2
1.1.1.5 Follow Quality / Control Activities	180	199.8	199.8

Table 3.21 shows the total cost of the Management. When calculating the unit cost of Man Power, the 1-month working salary is divided by the total 1-month working time. This unit cost is shown in minutes. Finally, the other costs are multiplied by the minutes spent to obtain the total cost. Man power cost is 3929.4 TL. The total cost is 3929.4 TL.

Table 3. 22 1.1.2 Accounting

COST CATEGORY	Time (min)	Manpower Cost (TL)	Cost (TL)
1.1.2 Accounting	30	6.6	12.3
1.1.2.1 Check Contract	5	1.1	2.05
1.1.2.2 Record the documents	5	1.1	2.05
1.1.2.3 Create Prescription	5	1.1	2.05
1.1.2.4 Create Waybill	5	1.1	2.05
1.1.2.5 Create Bill	5	1.1	2.05
1.1.2.6 Send Prescription, Waybill and Bill	5	1.1	2.05

Table 3.22 shows the total cost of the Accounting. When calculating the unit cost of Man Power, the 1-month working salary is divided by the total 1-month working time. This unit cost is shown in minutes. Finally, the other costs are multiplied by the minutes spent to obtain the total cost. Man power cost is 6.6 TL. The total cost is 12.3 TL.

Table 3. 23 1.1.3 Purchasing

COST CATEGORY	Time (min)	Manpower Cost (TL)	Cost (TL)
1.1.3 Purchasing	607	133.54	248.87
1.1.3.1 Make Demand Verification	2	0.44	0.82
1.1.3.2 Create Material Requirement List	2	0.44	0.82
1.1.3.3 Request from Supplier	1	0.22	0.41
1.1.3.4 Bid Evaluation	5	66	123
1.1.3.5 Select Supplier	5	66	123
1.1.3.6 Fill up Order Form	2	0.44	0.82

Table 3.23 shows the total cost of the Purchasing. When calculating the unit cost of Man Power, the 1-month working salary is divided by the total 1-month working time. This unit cost is shown in minutes. Finally, the other costs are multiplied by the minutes spent to obtain the total cost. Man power cost is 133.54 TL. The total cost is 248.87 TL.

Table 3. 24 1.1.4 Production Planning

COST CATEGORY	Time (min)	Manpower Cost (TL)	Cost (TL)
1.1.4 Production Planning	370	81.4	151.7
1.1.4.1 Check Orders	150	33	61.5
1.1.4.2 Create Production Schedule	150	33	61.5
1.1.4.3 Determine Material Requirements	60	13.2	24.6
1.1.4.4 Create Job Order	10	2.2	4.1

Table 3.24 shows the total cost of the Production Planning. When calculating the unit cost of Man Power, the 1-month working salary is divided by the total 1-month working time. This unit cost is shown in minutes. Finally, the other costs are multiplied by the minutes spent to obtain the total cost. Man power cost is 81.4 TL. The total cost is 151.7 TL.

Table 3. 25 1.1.5 Quality Management

COST CATEGORY	Time (min)	Manpower Cost (TL)	Cost (TL)
1.1.5 Quality Management	285	62.7	116.85
1.1.5.1 Check Job Order	15	3.3	6.15
1.1.5.2 Create Quality Plan	60	13.2	24.6
1.1.5.3 Determine Machine and Equipment to be Maintained and Repaired	30	6.6	12.3
1.1.5.4 Report on Quality System	180	39.6	73.8

Table 3.25 shows the total cost of the Quality Management. When calculating the unit cost of Man Power, the 1-month working salary is divided by the total 1-month working time. This unit cost is shown in minutes. Finally, the other costs are multiplied by the minutes spent to obtain the total cost. Man power cost is 62.7 TL. The total cost is 116.85 TL.

Table 3. 26 1.2 Manufacturing

COST CATEGORY	Time (min)	Manpower Cost (TL)	Cost (TL)
1.2 Manufacturing	37823	8321.06	15507.43
1.2.1 Raw Material Quality Control	29	6.38	11.89
1.2.2 Manufacturing	37722	8298.84	15466.02
1.2.3 Leveling	72	15.84	29.52

Table 3.26 shows the total cost of the Manufacturing. When calculating the unit cost of Man Power, the 1-month working salary is divided by the total 1-month working time. This unit cost is shown in minutes. Finally, the other costs are multiplied by the minutes spent to obtain the total cost. Man power cost is 8321.06 TL. The total cost is 15507.43 TL.

Table 3. 27 1.2.1 Raw Material Quality Control

COST CATEGORY	Time (min)	Manpower Cost (TL)	Cost (TL)
1.2.1 Raw Material Quality Control	29	6.38	11.89
1.2.1.1 Check the raw material delivery note from the customer, the compliance report and the test report	5	1.1	2.05
1.2.1.2 Label the raw material	2	0.44	0.82
1.2.1.3 Save quality control information	7	1.54	2.87
1.2.1.4 Send the raw material to the warehouse	15	3.3	6.15

Table 3.27 shows the total cost of the Raw Material Quality Control. When calculating the unit cost of Man Power, the 1-month working salary is divided by the total 1-month working time. This unit cost is shown in minutes. Finally, the other costs are multiplied by the minutes spent to obtain the total cost. Man power cost is 6.38TL. The total cost is 11.89 TL.

Table 3. 28 1.2.2 Manufacturing

COST CATEGORY	Time (min)	Manpower Cost (TL)	Cost (TL)
1.2.2 Manufacturing	37722	8298.84	15466.02
1.2.2.1 Check Job Orders And Technical Images	45	9.9	18.45
1.2.2.2 Make Programming	120	26.4	49.2
1.2.2.3 Prepare Machine	1	0.22	0.41
1.2.2.4 Start Manufacturing	55	12.1	22.55
1.2.2.5 Check First Part	90	19.8	36.9
1.2.2.6 Continue Manufacturing	18700	4114	7667
1.2.2.7 Fill Waste Information Form	3	0.66	1.23
1.2.2.8 Send Waste	18700	4114	7667
1.2.2.9 Fill Production Control Form	5	1.1	2.05
1.2.2.10 Send Pieces To Leveling	3	0.66	1.23

Table 3.28 shows the total cost of the Manufacturing. When calculating the unit cost of Man Power, the 1-month working salary is divided by the total 1-month working time. This unit cost is shown in minutes. Finally, the other costs are multiplied by the minutes spent to obtain the total cost. Man power cost is 8298.4 TL. The total cost is 15466.02 TL.

Table 3. 29 1.2.3 Leveling

COST CATEGORY	Time (min)	Manpower Cost (TL)	Cost (TL)
1.2.3 Leveling	72	15.84	29.52
1.2.3.1 Check Job Order And Technical Image	3	0.66	1.23
1.2.3.2 Select Appropriate Machine	1	0.22	0.41
1.2.3.3 Perform the Leveling Process	65	14.3	26.65
1.2.3.4 Create Levelling Report	3	0.66	1.23

Table 3.29 shows the total cost of the Leveling. When calculating the unit cost of Man Power, the 1-month working salary is divided by the total 1-month working time. This unit cost is shown in minutes. Finally, the other costs are multiplied by the minutes spent to obtain the total cost. Man power cost is 15.84 TL. The total cost is 29.52TL.

Table 3. 30 1.3 Quality

COST CATEGORY	Time (min)	Manpower Cost (TL)	Cost (TL)
1.3 Quality	170	37.4	69.7
1.3.1 Acceptance And First Control	140	30.8	57.4
1.3.2 Quality and Control	30	6.6	12.3

Table 3.30 shows the total cost of the Quality. When calculating the unit cost of Man Power, the 1-month working salary is divided by the total 1-month working time. This unit cost is shown in minutes. Finally, the other costs are multiplied by the minutes spent to obtain the total cost. Man power cost is 37.4 TL. The total cost is 69.7 TL.

Table 3. 31 1.3.1 Acceptance And First Control

COST CATEGORY	Time (min)	Manpower Cost (TL)	Cost (TL)
1.3.1 Acceptance And First Control	140	30.8	57.4
1.3.1.1 Check Job Orders And Technical Images	20	4.4	8.2
1.3.1.2 Make Programming	120	26.4	49.2

Table 3.31 shows the total cost of the Acceptance And First Control. When calculating the unit cost of Man Power, the 1-month working salary is divided by the total 1-month working time. This unit cost is shown in minutes. Finally, the other costs are multiplied by the minutes spent to obtain the total cost. Man power cost is 30.8 TL. The total cost is 57.4 TL.

Table 3. 32 1.3.2 Quality and Control

COST CATEGORY	Time (min)	Manpower Cost (TL)	Cost (TL)
1.3.2 Quality and Control	30	6.6	12.3
1.3.1.1 Prepare Machine	3	0.66	1.23
1.3.1.2 Make Control Process	20	4.4	8.2
1.3.1.3 Fill Quality / Control Form	5	1.1	2.05
1.3.1.4 Send Products to Depot	2	0.44	0.82

Table 3.32 shows the total cost of the Quality and Control. When calculating the unit cost of Man Power, the 1-month working salary is divided by the total 1-month working time. This unit cost is shown in minutes. Finally, the other costs are multiplied by the minutes spent to obtain the total cost. Man power cost is 6.6 TL. The total cost is 12.3 TL.

Table 3. 33 1.4 Storage and Delivery

COST CATEGORY	Time (min)	Manpower Cost (TL)	Cost (TL)
1.4 Storage and Delivery	52	11.44	21.32
1.4.1 Storage	41	9.02	16.81
1.4.2 Delivery	11	2.42	4.51

Table 3.33 shows the total cost of the Storage and Delivery. When calculating the unit cost of Man Power, the 1-month working salary is divided by the total 1-month working time. This unit cost is shown in minutes. Finally, the other costs are multiplied by the minutes spent to obtain the total cost. Man power cost is 11.44 TL. The total cost is 21.32 TL.

Table 3. 34 1.4.1 Storage

COST CATEGORY	Time (min)	Manpower Cost (TL)	Cost (TL)
1.4.1 Storage	41	9.02	16.81
1.4.1.1 Check Job Order and Quality / Control Form	5	1.1	2.05
1.4.1.2 Pack Product	3	0.66	1.23
1.4.1.3 Place Products	10	2.2	4.1
1.4.1.4 Check Stock	5	1.1	2.05
1.4.1.5 Send Products	15	3.3	6.15
1.4.1.6 Update Inventory	3	0.66	1.23

Table 3.34 shows the total cost of the Storage. When calculating the unit cost of Man Power, the 1-month working salary is divided by the total 1-month working time. This unit cost is shown in minutes. Finally, the other costs are multiplied by the minutes spent to obtain the total cost. Man power cost is 9.02 TL. The total cost is 16.81 TL.

Table 3. 35 1.4.2 Delivery

COST CATEGORY	Time (min)	Manpower Cost (TL)	Cost (TL)
1.4.2 Delivery	11	2.42	4.51
1.4.2.1 Check Job Orders And Stock Form	5	1.1	2.05
1.4.2.2 Prepare Shipment List	1	0.22	0.41
1.4.2.3 Take Delivery Note	1	0.22	0.41
1.4.2.4 Make Delivery	3	0.66	1.23
1.4.2.5 Save The Shipment Information To ERP.	1	0.22	0.41

Table 3.35 shows the total cost of the Delivery. When calculating the unit cost of Man Power, the 1-month working salary is divided by the total 1-month working time. This unit cost is shown in minutes. Finally, the other costs are multiplied by the minutes spent to obtain the total cost. Man power cost is 2.42 TL. The total cost is 4.51 TL.

At the end of the calculations, the total cost of the process from ABC to the delivery of the final product from the customer order is calculated. The total cost of the system is 20057,57 TL. The manpower cost is 12583,54 TL. According to industry 4.0, manpower must be at a minimum level. The department that has the most finance in the entire system is Manufacturing. But if the cost of production was lower, the share of manpower in total cost could be ignored. The next is Management. In the transition period to industry 4.0, the first department to be cost-improved is seen as Manufacturing in the calculations.

Table 3. 36 Summary table of ABC Company

Definition	Time (min)	Manpower Cost (TL)	Cost (TL)	TRL
1.0 ABC' s Business Management System	42877	12583.54	20057.57	2
1.1 Management	4832	4213.64	4459.12	2
1.2 Manufacturing	37823	8321.06	15507.43	2
1.3 Quality	170	37.4	69.7	2
1.4 Storage and Delivery	52	11.44	21.32	2

The table shows the cost and technology readiness level of ABC. 42,877 minutes worked per month to complete the project. In this thesis, the cost of labor is 12583.54, and the share of man power in total cost is 63%. The total cost is 20057.57 TL. Also the total readiness level of the whole system is calculated as 2 as a result of observations.

CHAPTER 4

CONCLUSION

Technology is rapidly changing and evolving day by day. The muscular power in production has already started to give a way to the brain and it's innovative capacity. It is very important for the national economies to follow this pace of global developments in their countries by urging large to small enterprises. New concepts such as internet of things, cloud, additive manufacturing with industry 4.0 have already entered corporate world where next step is touching our lives.

In the ever-growing world, competition in business is becoming difficult day by day. In order to adapt to the developing world, it is necessary to increase the product variety, the quality by keeping costs at a minimum level, to produce error-free and fast products. According to system engineering, the system must be considered as a whole. In other words, it is necessary to think about the concepts such as training according to the customer's desire, establishing proper working order, lowering the costs to the minimum level, improving the productivity and the quality.

Firms are trying to advance their technology in order to increase their competitiveness. Technologically advanced firms are able to respond more quickly to customer requests. The market rates are increasing. The development of technology for the defense industry reduces the number of errors in parts produced with high precision. Firms are developed to the Industry 4.0 approach that they have the ability to closely monitor. Firms can respond to changing technologies.

In the transition to Industry 4.0, there are works that fall into priority firms. These can be defined primarily as taking necessary actions within the firms and taking measures to increase productivity. Because permanent solutions can not be obtained by supplying from the outside, it is necessary for the firm to develop itself with original solutions. These solutions are benefits during long term. Among the main objectives of the transition to the industry 4.0 is to increase the total productivity of the ABC

company. For this purpose, its system must first be identified and the entire flow must be named.

Structured Systems Analysis and Design Method, SSADM, was used to identify the ABC company's system. It was created so that all the flow in the company can be drawn and executed when used in the SSADM program. When analyzing the system, the entire process from submission of the customer proposal to delivery of the product to the customer has been examined. Processes at factory followed for a long time. The diagrams were created with this approach.

ABC Company serves all fields of defense industry and has a high-tech machine that works with accuracy. It is working with high sensitivity and micron level measurement ranges. It is made from quality control test using high precision measurement equipment. The company provides a mechanical system by mechanically assembling the parts produced. However, when SSADM diagrams and the overall system were analyzed, it was seen that they had a labor-intensive system. As a result, no matter how advanced the used machines are, if the general system structure does not use the technology, the system is still at a technologically low level.

With the progress of the technology used in production, the quantity and quality of the product can be increased by using a certain raw material. Firms that are manufacturing technology can produce more products than a present product. As a result, costs are reduced, production speed is increased and production savings are achieved.

The technology assesses the level of technological readiness of firms with a standard measurement system. It is aimed to create a common language for all companies with the original metrics that based on the parameters of Nasa. This common language will enable companies to determine their level of technology and how ready they are for Industry 4.0. The technology readiness level of the ABC company was evaluated by looking at the work determined by the SSADM. As a result of this evaluation, the level was much lower than expected. In other words, it has been determined that the ABC company has not yet ready for the Industry 4.0 and should systematically improve in future development plans. Looking at the SSADM diagrams, it was determined that the technology levels of the CNC machines that are used for production are high. But

the level of technology is very low in the work complete to the stage of production, the TRL values of the machines have been ignored.

While interpreting the SSADM diagrams, the first thing see in the system is the lack of a mainframe. This slows down communication between departments and technologically lowers the firm is a very low level. All units communicate with each other manually and data flow is slowing down. Since the data flow is slow, this also affects the time it takes to produce a unit product. For example, it is not systematically handcrafted to come from a management department of a work order to work in production. This flow has seriously slowed down the system. At the same time, the data is stored and stored later by manual filing. This process, contrary to the Industry 4.0 approach, should be at the beginning of the first steps to be improved. Inter-unit communication and data flow should be provided with an integrated hole system.

When the cost is calculated, it is calculated by taking into account the information of one unit of product given by ABC company. Within this unit cost, there are labor, materials, energy and general expenses for a product. The Cost Breakdown Structure method was used when the cost was calculated. This method is based on SSADM diagrams as if the technology readiness level was calculated. In other words, the cost per unit product is calculated for ABC company for each user requierments done. Looking at the costs, it is seen that labor cost has a great place in total cost. This is the most important proof that ABC is not in a technologically sufficient level. In order to achieve sufficient maturity, the ABC firm must use an Enterprise Resource Planning (ERP) system to provide communication between departments. ERP will be able to store the data generated in production, to use this data later, and to gain the ability to respond faster. In the following process, ABC company should transfer to Internet of Things to make production without manpower, collect cloud based data and process this data. It is then aimed at creating a development plan that will guide them to the least amount of share in the workmanship mailing.

In this thesis, ABC Company has been analyzed for Industry 4.0 readiness with system engineering approach. Firstly, ABC's business system was assessed by the technique of SSADM. Three levels of flow diagrams are drawn where on the other hand user requirements were determined and listed. Cost and nonparametric values of the

identified user needs for ABC Company have been identified. During this thesis, the technologic level of the company versus their potential savings against automation through Industry 4.0 has been revealed. Recommendations around digitization have been introduced in accordance with the industry 4.0 concept with regards to jobs with a low level of technological maturity. After the digital suggestions are brought in, ABC's technologic readiness level and costs are recalculated. As a result of this study, prioritization of user needs to digitize and this digitalization was provided as options in front of the company management team. This analysis can be used as a role model in assessment of the level of technological readiness and also be utilized as a guide to preparation to ramp up technological levels for other companies manufacturing products.

REFERENCES

[1] Kagermann, H., Wahlster, W., Helbig, J., "*Recommendations for strategic initiative INDUSTRIE 4.0*", Retrieved April 2018, from implementing the http://www.acatech.de/fileadmin/user_upload/Baumstruktur_nach_Website/Acatech/root/de/Material_fuer_Sonderseiten/Industrie_4.0/Final_report__Industrie_4.0_accessible.pdf. April 2013

[2] Sanders, A., Elangeswaran, C., & Wulfsberg, J., "Industry 4.0 Implies Lean Manufacturing: Research Activities in Industry 4.0 Function as Enablers for Lean Manufacturing", Journal of Industrial Engineering and Management, 9(3), 811-833, Germany, 2016

[3] Albert, M. "*Seven Things to Know about the Internet of Things and Industry 4.0*". Retrieved July 10, 2018 from https://www.mmsonline.com/articles/7-things-to-know-about-the-internet-of-things-and-industry-40. January 9, 2015.

[4] Geissbauer, R., Schrauf, S., Koch, V., Kuge, S. "I*ndustry 4.0 - Opportunities and Challenges of the Industrial Internet*". Retrieved May 23, 2018 from https://www.pwc.nl/en/assets/documents/pwc-industrie-4-0.pdf. December, 2014

[5] Lu, Y. Industry 4.0: A Survey on Technologies, "Applications and Open Research Issues". Journal of Industrial Information Integration, 6, 1-10. USA. 2017

[6] Magruk, A., "Uncertainty In The Sphere Of The Industry 4.0 – Potential Areas To Research", Business, Management and Education, 14(2): 275–29. Poland, 2016.

[7] Lee, J., Bagheri, B., Kao, H., "A Cyber-Physical Systems Architecture For Industry 4.0-Based Manufacturing Systems", Manufacturing Letters, 3, 18-23, United States, 2015

[8] Bahill,T., Gissing, B., "Re-evaluating Systems Engineering Concepts Using Systems Thinking", IEEE Transactions On Systems, Man, And Cybernetics—Part C: Applications And Reviews, 28(4), USA, 1998

[9] Gerbert, P., Lorenz, M., Rüßmann, M., Waldner, M., Justus, J., Engel, P., Harnisch, M., "*Industry 4.0: The Future of Productivity and Growth in Manufacturing Industries*" Retrieved May 26, 2018, from (https://www.bcgperspectives.com/content/articles/engineered_products_project_business_industry_40_future_productivity_growth_manufacturing_industries/?chapter=2#chapter2_section2. 2015

[10] Ang, H., Goh, C., Saldivar, A., Li, Y., "Energy-Efficient Through-Life Smart Design, Manufacturing and Operation of Ships in an Industry 4.0 Environment", Energies, 10, 610, 2017

[11] Bunse, B., Kagermann, H., Wahister, W., "Industrie 4.0 Smart Manufacturing For The Future", Germany Trade& Invest, 2014

[12] Praveena, R., "*Disruptive Innovation In Operations Scenario - Industry 4.0*", Retrieved April 10, 2018, from https://www.linkedin.com/pulse/disruptive-innovation-operations-scenario-industry-40-praveena. 2016

[13] Aydın, M., "*Bir Üretim Faktörü Olarak Teknolojinin Değerlendirilmesi Ve Yeni Teknoloji Kullanımının Maliyetler Üzerinde Ki Etkisi*", Retrieved April 16, 2018, from http://www.mustafakemalaydin.com/cgi-sys/suspendedpage.cgi?p=539. 2014

[14] Tao, F.,Wang, Y., Zuo, Y.,Yang, H., Zhang, M., "Internet of Things in product life-cycle energy management, Journal of Industrial Information Integration", Journal of Industrial Information Integration, 1, 26-39, 2016

[15] Jacobs, S., "Engineering Information Securty" (2nd Ed.) John Wiley & Sons, Inc., 2016

[16] Thames,L., Schaefer, D., "Software-Defined Cloud Manufacturing for Industry 4.0", Changeable, Agile, Reconfigurable & Virtual Production Conference, 2016.

[17] Ford, S., “Additive Manufacturing Technology: Potential Implications for U.S. Manufacturing Competitiveness”, Journal of International Commerce and Economics, 2014.

[18] Qina, J., Liua, Y., Grosvenor, R. “A Framework of Energy Consumption Modelling for Additive Manufacturing Using Internet of Things”, The 50th CIRP Conference on Manufacturing Systems, 63, 307 – 312, UK, 2017

[19] Zhao, Z., Huang, P., Lu, Z., Liu, Z., “Augmented reality for enhancing tele-robotic system with force feedback”, Robotics and Autonomous Systems, 96, 93-101, 2017

[20] Blanchard, B., Blyler, J., “System Engineering Management” (5th ed.), John Wiley & Sons, Inc., 2016

[21] Hitchins, D., “Systems Engineering”, A 21st Century Systems Methodology, John Wiley & Sons Ltd, 2007

[22] " *What is Simulation*”, Retrieved April 9, 2018, from http://www.simulationaustralasia.com/about/what-is-simulation

[23] Jamshidi, M., “Systems Of Systems Engineering”, Taylor & Francis Group, Llc., 2009

[24] Hegarty, F., Amoore, J., Blackett, P., McCarthy, J., Scott, R., “Healthcare Technology Management – A Systematic Approach” (1st ed.), Taylor & Francis Group, Llc, 2016

[25] Aggelinos, G., Katsikas, S., “Enhancing SSADM With Disaster Recovery Plan Activities”, Information Management & Computer Security, 19 (4), 248-261, 2011

[26] O’brıen, S.J., Jones, D.A., “Function Points In SSADM”, Software QuaZity Journal 2, l-11, 1992.

[27] “*What Are Autonomous Robots*?”, Retrieved May 3, 2018, from https://stanleyinnovation.com/what-autonomous-robots/.

[28] Sokri, A., "Life Cycle Costing of Military Equipment", Proceedings of the International Conference of Control, Dynamic Systems, and Robotics, 45, Canada, 2014.

[29] Hermann, M., Pentek, T., Otto, B., "Design Principles for Industrie 4.0 Scenarios Design Principles for Industrie 4.0 Scenarios", 49th Hawaii International Conference on System Sciences. USA, 2016

[30] "*Structured Systems Analysis and Design Method (SSADM) with Concept Draw PRO*" Retrieved March 16, 2018, from http://www.conceptdraw.com/How-To-Guide/ssadm

[31] Wong, K., Hernandez, A., "A Review of Additive Manufacturing", ISRN Mechanical Engineering, 2012(4),10, 2012

[32] Bolat, S.k, "*Technology Readiness Level (TRL) put into practice*", Retrieved March 20, 2018, from https://serkanbolat.com/2016/02/17/technology-readiness-level-trl-put-into-practice/. 2016

[33] Fabrycky, W. J., Blanchard, B. S., "Life-Cycle Cost and Economic Analysis", Prentice-Hall, Inc., NJ, USA, 1991

[34] Asking, P., Gustavsson, S., "Cost Breakdown Analysis, A study of product costs in kitchen appliances at IKEA of Sweden", Department of Materials and Manufacturing Technology, Chalmers University of Technology, Sweden, 2011

[35] Mai, T., "*Technology Readiness Level*" Retrieved April 20, 2018, from https://www.nasa.gov/directorates/heo/scan/engineering/technology/txt_accordion1.html. 2012

[36] Thamesa, L., Schaefer, D., "Software-Defined Cloud Manufacturing for Industry 4.0", Lane Thames and Dirk Schaefer / Procedia CIRP, 52, 12 – 17, 2016

[37] Wangler, B., Paheerathan1, S.J., "*Horizontal and Vertical Integration of Organizational IT Systems*", Retrieved April 10, 2018, from http://citeseerx.ist.psu.edu/viewdoc/summary?doi=10.1.1.106.2741. 2000

[38] Hashish, E., "*What are the characteristics of a good CBS (Cost Breakdown Structure)*?", Retrieved May 20, 2018, from https://www.bayt.com/en/specialties/q/260049/what-are-the-characteristics-of-a-good-cbs-cost-breakdown-structure/. 2016

[39] Haskins, C., "Systems Engineering Handbook: A Guide for System Life Cycle Processes and Activities", INCOSE-TP-2003–002–03.2.2, Version 3.2.2, San Diego, CA, 2006

[40] "*What you need for a successful Industry 4.0-ready software project*", Retrieved April 15, 2018, from https://www.progea.com/wp-content/uploads/2017/11/Industry4.0_White_Paper_Eng.pdf.

[41] Frankel, E., "Systems Reliability and Risk Analysis", Martinus Nijhoff Publishers, The Netherlands, 1984

[42] Witkowski, K., "Internet of Things, Big Data, Industry 4.0 – Innovative Solutions in Logistics and Supply Chains Management", Procedia Engineering 182, 763 – 769, 2017

[43] Khosrowshahi, F., "Enhanced project brief: structured approach to client-designer interface, Engineering", Construction and Architectural Management, 22 (5), 474-492, 2015

[44] U.S. Department of Energy, "Technology Readiness Assessment Guide", 2009

CURRICULUM VITAE

PERSONAL INFORMATION



Name Surname : Gizem BABAYİĞİT

Date of Birth : 1993

Phone : +90 544 2510243

E-mail : gizemmbabayigit@gmail.com

EDUCATION

High School : Ankara Fethiye Kemal Mumcu Anatolian High School (2007-2011)

Bachelor : Gazi University / ANKARA (2011-2015)

Master Degree : Ankara Yıldırım Beyazıt University / (2016-continued)

WORK EXPERIENCE

10/2017- Work Preparation Engineer- Bozankaya A.Ş

- Work Preparation Department

TOPICS OF INTEREST

- Manufacturing -Industry 4.0 ,
- Production -Systems Engineering